Rexroth
Bosch Group

External Gear Pumps Series F

RE 10 089/12.10
Replaces: Series F
Issue 06.10

AZPF-...

Fixed pumps
$V = 4.0...28\ cm^3/rev$

Overview of contents

Contents	Page
General	2
Product overview	3
Ordering code single pumps	4
Ordering code multiple pumps	5
Drive shaft	6
Front cover	7
Line ports	9
Pumps with integral valves	10
Design calculations for pumps	10
Performance charts	11
Noise charts	14
Specifications	16
Drive arrangements	17
Multiple pumps through drives	19
Unit dimensions	20
Notes for commissioning and maintenance	59
Service parts	60
Fittings	62
Ordering-No.	64

Features

- Nominal pressure 280 bar
- Slide bearings for heavy duty applications
- Drive shafts to ISO or SAE
- Combination of several pumps possible
- Line ports:
  connection flange or screw thread
- Consistent high quality thru mass production
- Numerous configuration variants available

General

Rexroth external gear pumps are available as standard gear pumps in the 4 series of B, F, N and G and as SILENCE gear pumps in the series of S, T and U, in which the displacements are graded by different gear widths. Further configuration variants are given by different flanges, shafts, valve arrangements and multiple pump combinations.

Construction

The external gear pump consists essentially of a pair of gears supported in bearing bushings and the case with a front and a rear cover. The drive shaft protrudes from the front cover where it is sealed by the shaft seal ring. The bearing forces are absorbed by special bearing bushings with sufficient elasticity to produce surface contact instead of line contact. They also ensure excellent resistance to galling – especially at low speed. The gears have 12 teeth. This keeps both flow pulsation and noise emission to a minimum.

The internal sealing is achieved by forces which are proportional to delivery pressure. This ensures optimum efficiency. The bearings provide the seal at the ends of the gaps between the teeth which carry the pressurized oil. The sealing zone between the gear teeth and the bearing is controlled by the admission of operating pressure to the rear of the bearing bushings. Special seals form the boundary of the zone. The radial clearance at the tips of the gear teeth is sealed by internal forces pushing them against the case.

Gear pump axial compensation

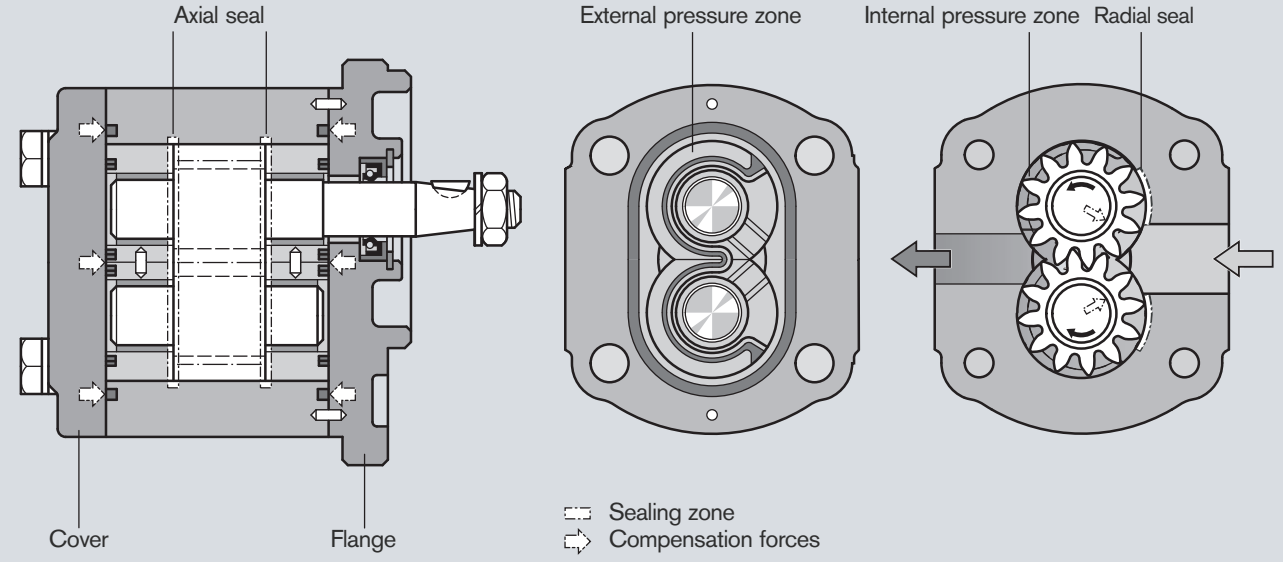

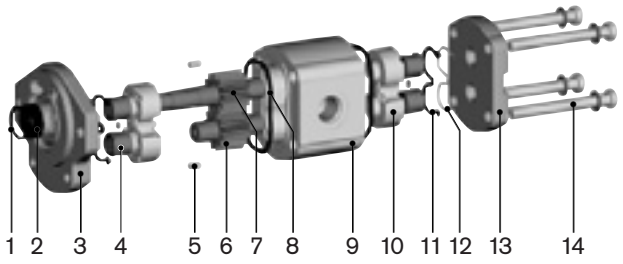

1 Retaining ring
2 Shaft seal ring
3 Front cover
4 Slide bearing
5 Centering pin
6 Gear
7 Gear (frictional)
8 Case seal
9 Pump case
10 Bearing
11 Axial zone seal
12 Support
13 End cover
14 Fixing screws

Product overview of “Series F” standard types

Version	Page
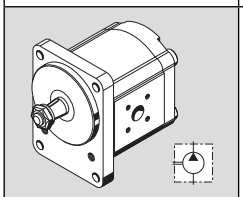	20
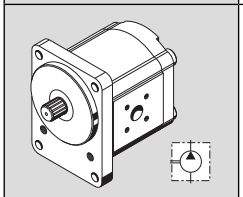	21
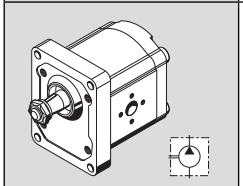	22
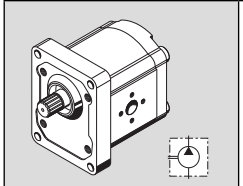	23
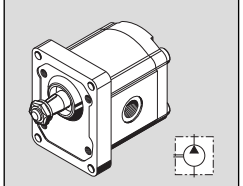	24
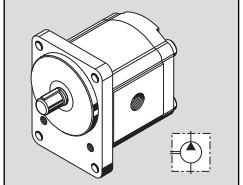	25
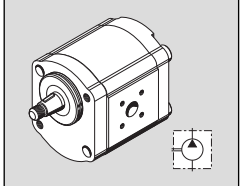	26
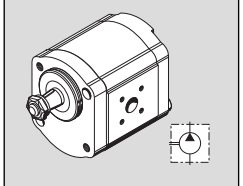	27
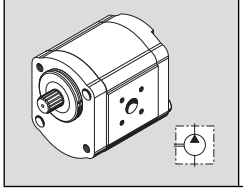	28

Version	Page
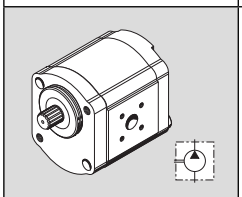	29
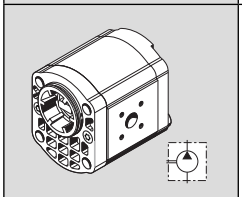	30
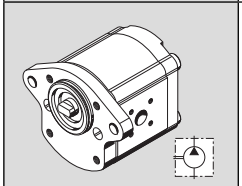	31
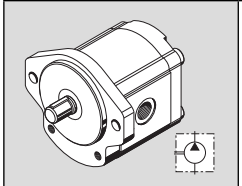	32
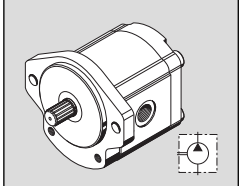	33
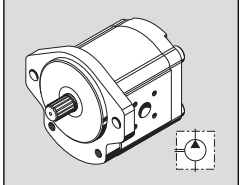	34
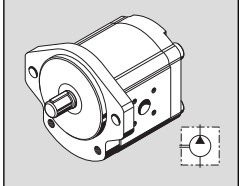	35
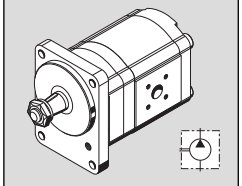	36
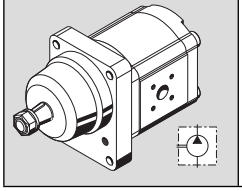	37

Version	Page
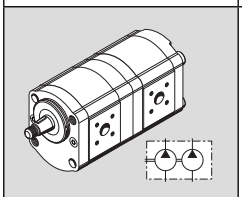	38
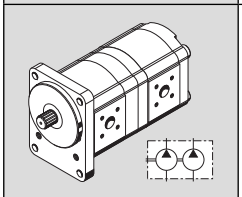	40
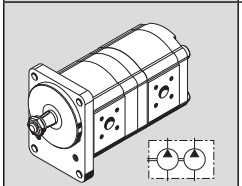	42
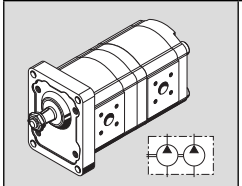	44
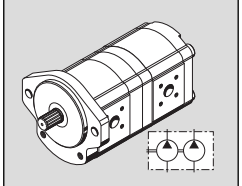	46
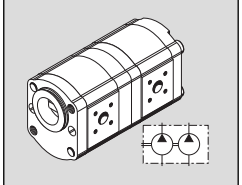	48
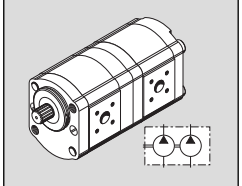	49
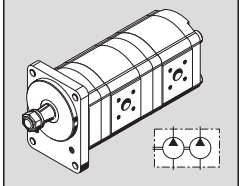	50
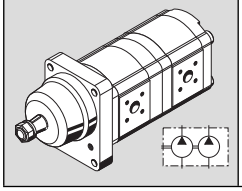	51

Version	Page
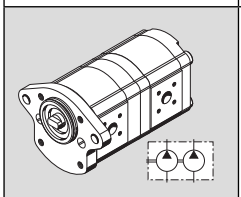	52
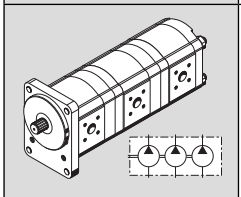	53
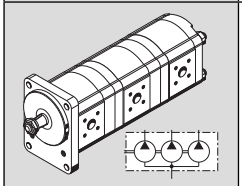	54
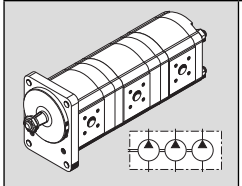	55
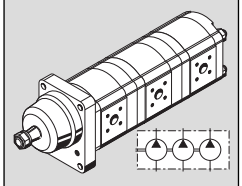	56
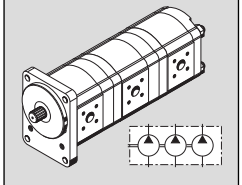	57
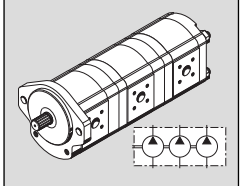	58

Ordering code

External gear units, single pumps, standard

AZ	P	F	–	x	x	–	016	R	C	B	20	M	B	18009	S xxxx

Function
P = Pump

Series
1 = Standard bearing
2 = Reinforced bearing

Version
0 = Phosphatized
1 = Phosphatized, pinned
2 = Chromatized, pinned

Size (F)
004 = 4.0 cm^3/rev
005 = 5.5 cm^3/rev
008 = 8.0 cm^3/rev
011 = 11.0 cm^3/rev
014 = 14.0 cm^3/rev
016 = 16.0 cm^3/rev
019 = 19.0 cm^3/rev
022 = 22.5 cm^3/rev
025 = 25.0 cm^3/rev
028 = 28.0 cm^3/rev

Direction of rotation
R = Clockwise
L = Counterclockwise

*) Some of the special designs shown on pages 18–55 are not covered in the illustration of the ordering code.

Special design *)

Valve adjustment
200 xx = PRV 200 bar
xxx 11 = FCV 11 l/min
18009 = PRV + FCV 180 bar, 9 l/min

Rear cover
B = Standard
D = PRV residual flow internal
E = FCV residual flow external
S = FCV residual flow internal
V = PRV + FCV

Seals
M = NBR
P = FPM
K = NBR, SSR in FPM

Drive shafts

		Suitable front cover	
C	Tapered key shaft 1:5	B	P
H	Tapered key shaft 1:8	O	
N	Dihedral claw	M	
Q	Straight keyed shaft SAE J 744 16-1 A	R	
R	Splined shaft SAE J 744 16-4 9T	R	C
P	Splined shaft SAE J 744 19-4 11T	R	C
F	Splined shaft DIN 5482 B 17 x 14	B	P
S	Tapered key shaft 1:5 for flange A	A	
A	Straight keyed shaft ISO Ø 18 mm	B	

Front cover

B	Square flange Centering Ø 80 mm
R	SAE J 744 82-2 A 2-bolt flange Ø 82.55 mm
P	2-bolt mounting Centering Ø 50 mm
O	Square flange Centering Ø 36.47 mm
C	SAE J 744 101-2 B 2-bolt flange Ø 101.6 mm
M	2-bolt mounting Centering Ø 52 mm with seal ring
A	Outboard bearing Ø 80 mm, Type 1
N	2-bolt mounting Centering Ø 50 mm
T	4-bolt mounting Ø 52 mm with seal ring
G	Outboard bearing Ø 80 mm, Type 2

Line ports

20	Rectangular flange
12	Thread (UNF-2B) SAE Seal ring BOSS
30	Rectangular flange
01	Pipe thread ISO 228/1
03	Thread, metric ISO 6149 with seal ring

Not all variants can be selected by using ordering code!
Please select the required pump by using the selection tables (standard types) or after consultation with Bosch Rexroth!
Special options are possible upon request.

Ordering code

External gear units, multiple pumps, standard

AZ	P	GGFF	–	x	x	–	032/022/016/005	R	C	B	20 20 20 20	K	B

Function
P = Pump

Series
B = 1.0...7.1 cm^3/rev
S = 4.0...28 cm^3/rev
F = 4.0...28 cm^3/rev
T = 20.0...36 cm^3/rev
N = 20.0...36 cm^3/rev
U = 22.5...63 cm^3/rev
G = 22.5...63 cm^3/rev

Series, relates to pump section 1
1x = Standard bearing
2x = Reinforced bearing

Version, relates to pump section 1
1 = Phosphatized, pinned
2 = Chromatized, pinned

Size
corresponding to each series

Direction of rotation
R = Clockwise,
L = Counter-clockwise

Rear cover
relates to last pump section
B = Standard

Seals
M = NBR
P = FPM
K = NBR, SSR in FPM
Shaft seal relate to pump section 1

Drive shafts relates to pump part 1			Front cover relates to pump part 1		Line ports every pump parts	
Series B:		Suitable front cover				
H	Tapered key shaft 1 : 8	O	O	Square flange Centering Ø 25.38 mm	02	Thread, metric DIN 3852 T1
Series F, S:						
C	Tapered key shaft 1 : 5	B	B	Square flange Centering Ø 80 mm	20	Rectangular flange
H	Tapered key shaft 1 : 8	O	O	Square flange Centering Ø 36.47 mm		
R	Splined shaft SAE J 744 16-4 9T	R	R	SAE J 744 82-2 A Centering Ø 82.55 mm 2-bolt mounting		
Series N, T:						
C	Tapered key shaft 1 : 5	B	B	Square flange Centering Ø 100 mm	07	Square flange SAE Thread, metric
D	Splined shaft SAE J 744 22-4 13T	C	C	SAE J 744 101-2 B Centering Ø 101.6 mm 2-bolt mounting	20	Rectangular flange
N	Dihedral claw	M	M	Centering Ø 52 mm with seal ring		
Series G, U:						
C	Tapered key shaft 1 : 5	B	B	Square flange Centering Ø 105 mm	07	Square flange SAE Thread, metric
D	Splined shaft SAE J 744 22-4 13T	C	C	SAE J 744 101-2 B Centering Ø 101.6 mm 2-bolt mounting	20	Rectangular flange
H	Tapered key shaft 1 : 8	O	O	Square flange Centering Ø 50.78 mm		

Not all variants can be selected by using ordering code!
Please select the required pump by using the selection tables (standard types) or after consultation with Bosch Rexroth!
Special options are possible upon request.

Drive shafts

C

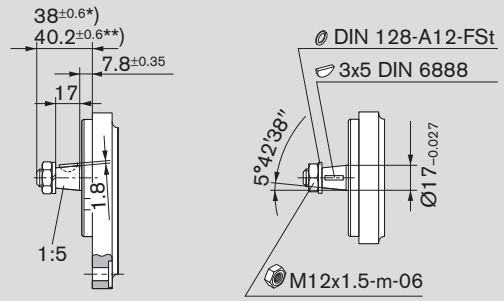

H

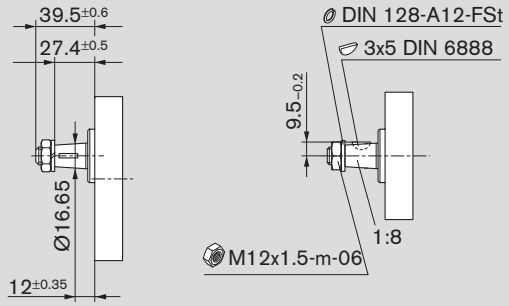

N

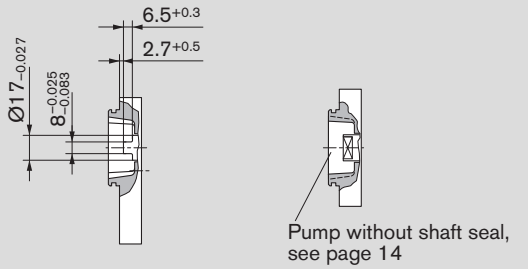

Q

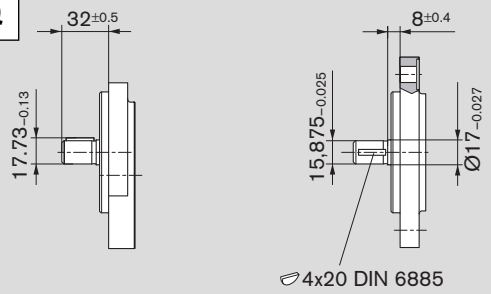

R

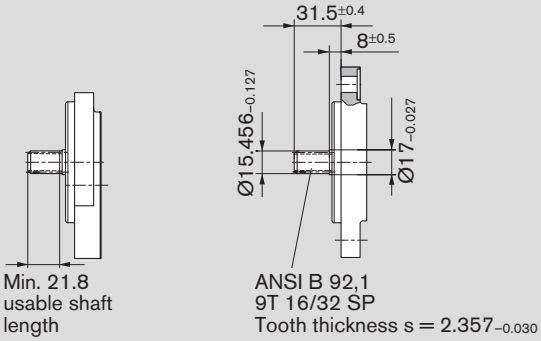

P

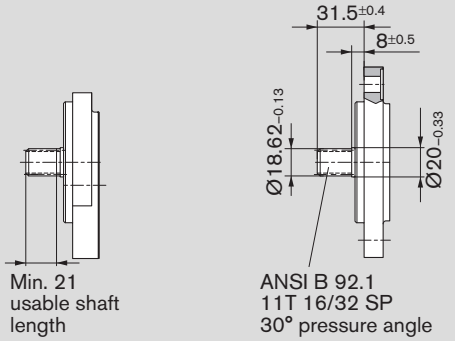

F

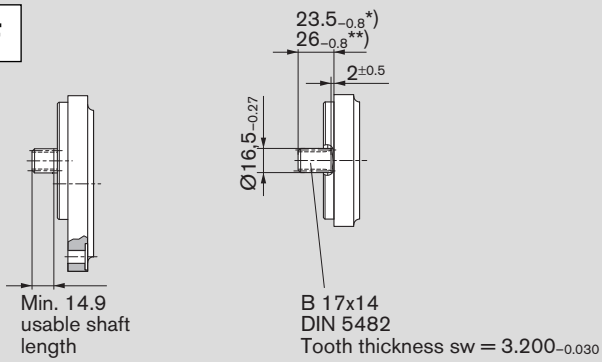

S

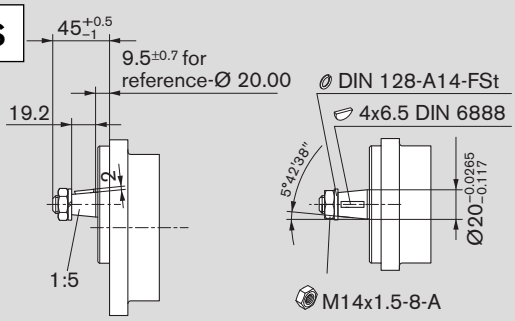

A

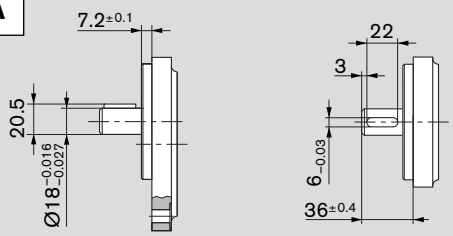

*) in combination with front cover B

**) in combination with front cover P

Front cover

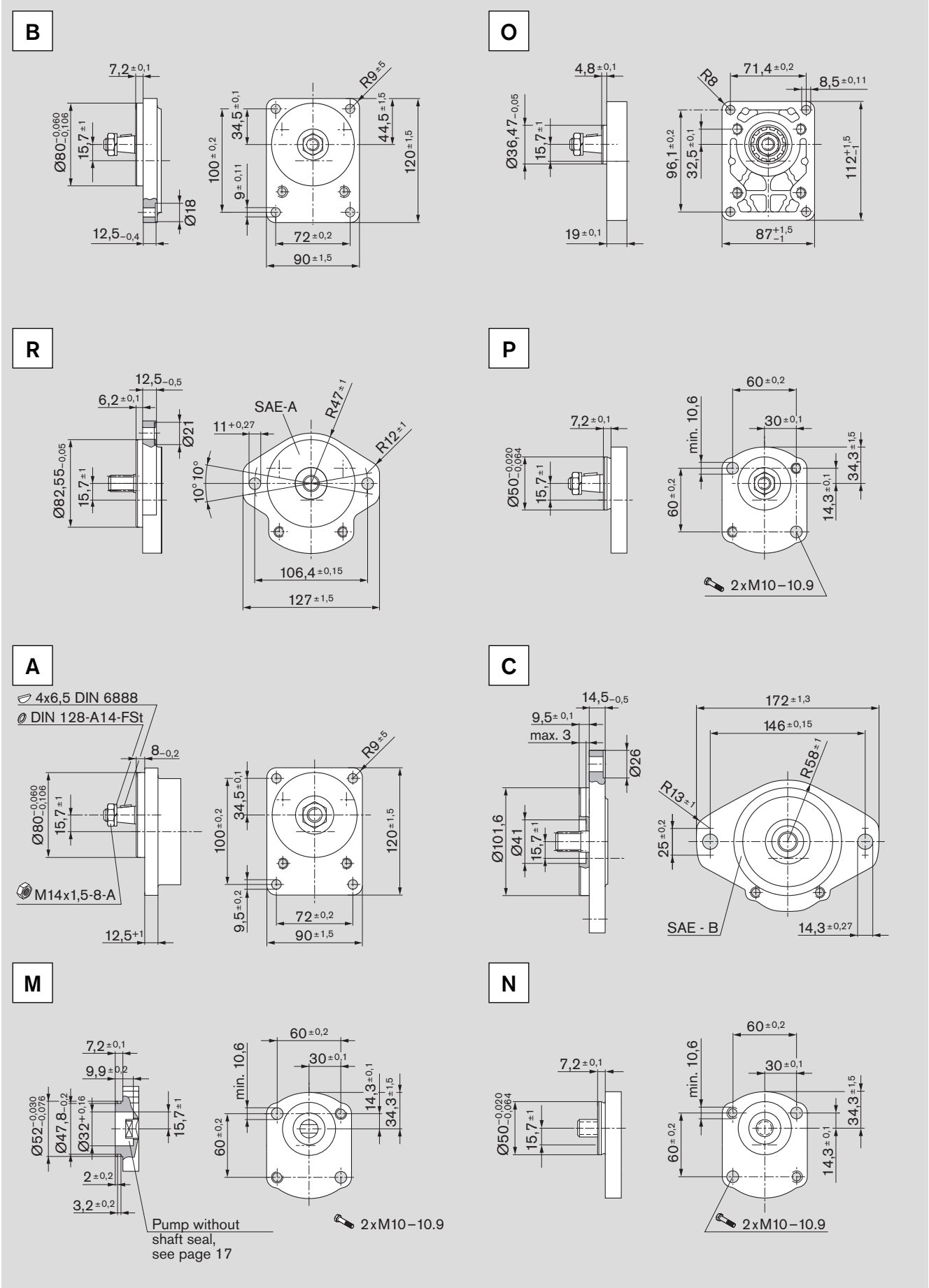
B
7,2±0,1
Ø80−0,060 −0,106
15,7±1
Ø18
12,5−0,4
R9±5
34,5±0,1
44,5±1,5
100±0,2
9±0,11
120±1,5
72±0,2
90±1,5
O
4,8±0,1
Ø36,47−0,05
15,7±1
19±0,1
R8
71,4±0,2
8,5±0,11
96,1±0,2
32,5±0,1
112+1,5 −1
87+1,5 −1
R
12,5−0,5
6,2±0,1
Ø21
Ø82,55−0,05
15,7±1
SAE-A
R47±1
11+0,27
R12±1
10° 10°
106,4±0,15
127±1,5
P
7,2±0,1
Ø50−0,020 −0,064
15,7±1
60±0,2
min. 10,6
30±0,1
34,3±1,5
60±0,2
14,3±0,1
2xM10−10.9
A
4x6,5 DIN 6888
DIN 128-A14-FSt
8−0,2
Ø80−0,060 −0,106
15,7±1
M14x1,5-8-A
12,5+1
R9±5
34,5±0,1
100±0,2
120±1,5
9,5±0,2
72±0,2
90±1,5
C
14,5−0,5
9,5±0,1
max. 3
Ø26
Ø101,6
Ø41
15,7±1
172±1,3
146±0,15
R58±1
R13±1
25±0,2
SAE - B
14,3±0,27
M
7,2±0,1
9,9±0,2
Ø52−0,030 −0,076
Ø47,8−0,2
Ø32+0,16
15,7±1
2±0,2
3,2±0,2
Pump without
shaft seal,
see page 17
60±0,2
min. 10,6
30±0,1
14,3±0,1
34,3±1,5
60±0,2
2xM10−10.9
N
7,2±0,1
Ø50−0,020 −0,064
15,7±1
60±0,2
min. 10,6
30±0,1
34,3±1,5
60±0,2
14,3±0,1
2xM10−10.9

Front cover (continued)

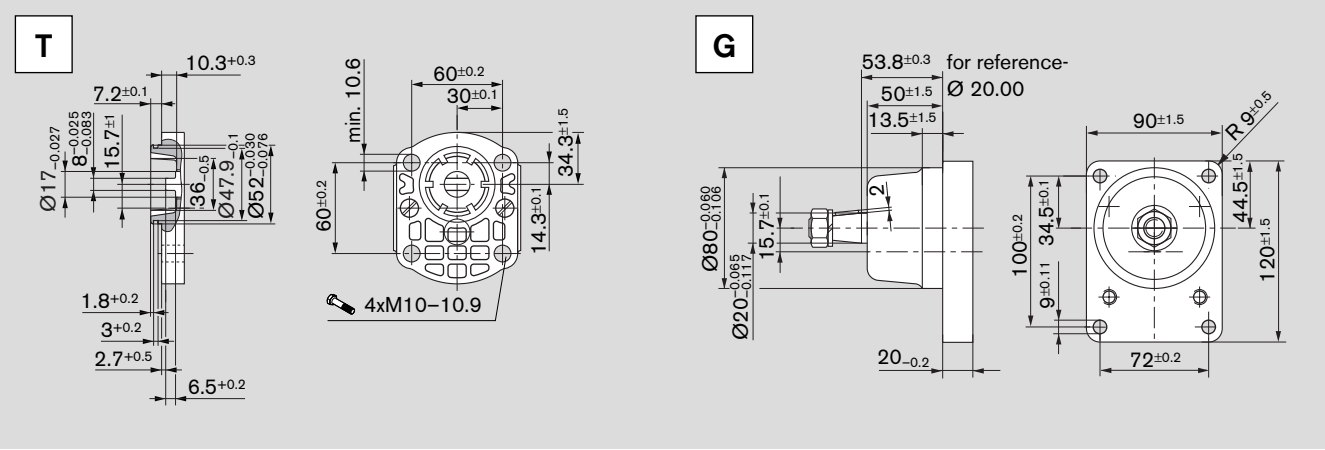

Line ports

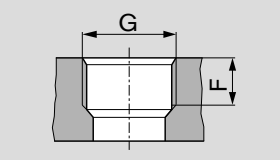

01 **Pipe thread ISO 228/1**

At pressures $p_2 > 210$ bar limited fatigue strength

Ordering code	Size	Pressure side G	Pressure side F	Suction side G	Suction side F
01	4...16 cm³	G 1/2	16	G 3/4	16
	19...28 cm³	G 3/4		G 1	19

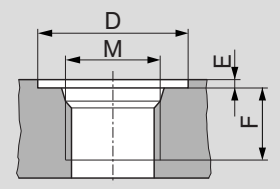

03 **Thread, metric ISO 6149 with seal ring**

At pressures $p_2 > 210$ bar limited service life

Ordering code	Size	Pressure side M	D	E	F	Suction side M	D	E	F
03	4...5.5 cm³	M 18 x 1.5	29	0.5	16	M 18 x 1.5	29	0.5	16
	8...16 cm³	M 22 x 1.5	34		18	M 27 x 2	40		19
	19...28 cm³					M 33 x 2	46		22

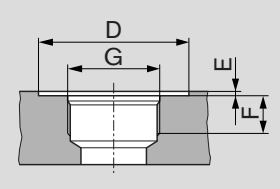

12 **Thread (UN-2B, UNF-2B) SAE seal ring BOSS**

At pressures $p_2 > 210$ bar limited service life

Ordering code	Size	Pressure side G	D	E	F	Suction side G	D	E	F
12	4...5.5 cm³	9/16–18 UNF-2B	25	0.5	13	9/16–18 UNF-2B	25	0.5	13
	8 cm³	7/8–14 UNF-2B	35		16	7/8–14 UNF-2B	35		16
	11...28 cm³					1 1/16–12 UN-2B	45		19

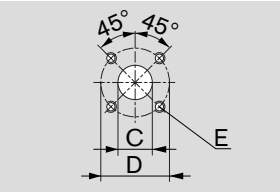

20 **Rectangular flange**

*) Dimension of Series 2

Ordering code	Size	Pressure side C	D	E	Suction side C	D	E
20	4...5.5 cm³	15	35	M 6, depth 13	15	40	M 6, depth 13
	8...22.5 cm³				20		
	19...28 cm³ *)				26	55	M 8, depth 13

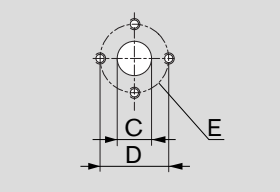

30 **Rectangular flange**

Ordering code	Size	Pressure side C	D	E	Suction side C	D	E
30	4...8 cm³	13.5	30.2	M 6, depth 13	13.5	30.2	M 6, depth 13
	11...28 cm³				20.0	39.7	M 8, depth 13

Gear pumps with integral valves

In order to reduce external pipework it is possible to incorporate a flow-control valve or pressure-relief valve in the rear cover of the gear pump. A typical application of this is in the supply of hydraulic oil in power steering systems. The pump delivers a constant flow irrespective of the speed at which it is driven. The excess flow is either returned internally to the suction port or distributed externally to other items of equipment.

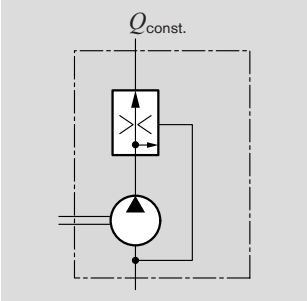

3-way flow-control valve.
Excess flow returned to suction line
$Q_{const.}$ = 2...30 l/min

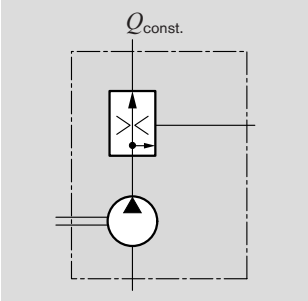

3-way flow-control valve.
Excess flow distributed externally; loadable
$Q_{const.}$ = 2...30 l/min

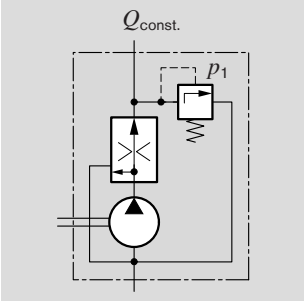

3-way flow-control valve with pressure-relief valve.
Excess flow returned to suction line
$Q_{const.}$ = 2...30 l/min
p_1 = 100...180 bar

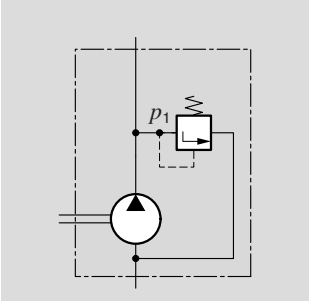

Pressure-relief valve.
Discharge returned to suction line
p_1 = 5...250 bar

Ordering code

S	**xxx17**

E	**xxx12**

V	**15011**

D	**180xx**

Design calculations for pumps

The design calculations for pumps are based on the following parameters:

V	[cm³/rev]	Displacement
Q	[l/min]	Delivery
p	[bar]	Pressure
M	[Nm]	Drive torque
n	[rev/min]	Drive speed
P	[kW]	Drive power

It is also necessary to allow for different efficiencies such as:

η_v	Volumetric efficiency
η_{hm}	Hydraulic-mechanical efficiency
η_t	Overall efficiency

The following formulas describe the various relationships.
They include correction factors for adapting the parameters to the usual units encountered in practice.

Caution: Diagrams providing approximate selection data will be found on subsequent pages.

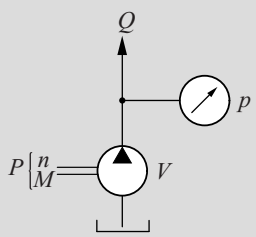

$$Q = V \cdot n \cdot \eta_v \cdot 10^{-5}$$

$$p = \frac{M \cdot \eta_{hm}}{1.59 \cdot V}$$

$$P = \frac{p \cdot Q}{6 \cdot \eta_t}$$

$$V = \frac{Q}{n \cdot \eta_v} \cdot 10^5$$

$$V = \frac{M \cdot \eta_{hm}}{159 \cdot p}$$

$$Q = \frac{6 \cdot P \cdot \eta_t}{p}$$

$$n = \frac{Q}{V \cdot \eta_v} \cdot 10^5$$

$$M = \frac{1.59 \cdot V \cdot p}{\eta_{hm}}$$

$$p = \frac{6 \cdot P \cdot \eta_t}{Q}$$

[%]

n —— η_v ⟶ Q
M —— η_{hm} ⟶ p
P —— η_t ⟶ $p \cdot Q$

V [cm³/rev] Q [l/min] p [bar]
n [rev/min] P [kW] M [Nm]

Caution: η [%] e.g. 95 [%]

Performance charts

$\nu = 32\ mm^2/s$, $\vartheta = 50\,°C$

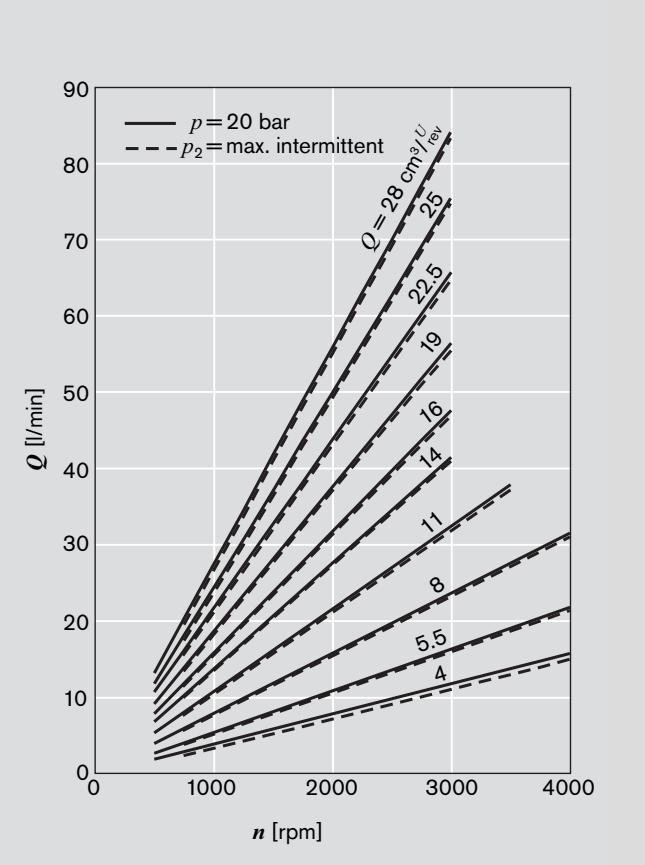

$Q = f\,(n, V)$ incl. η_v
$P = f\,(n, p)$ ——— incl. η_t
$M = f\,(n, p)$ - - - incl. η_{hm}

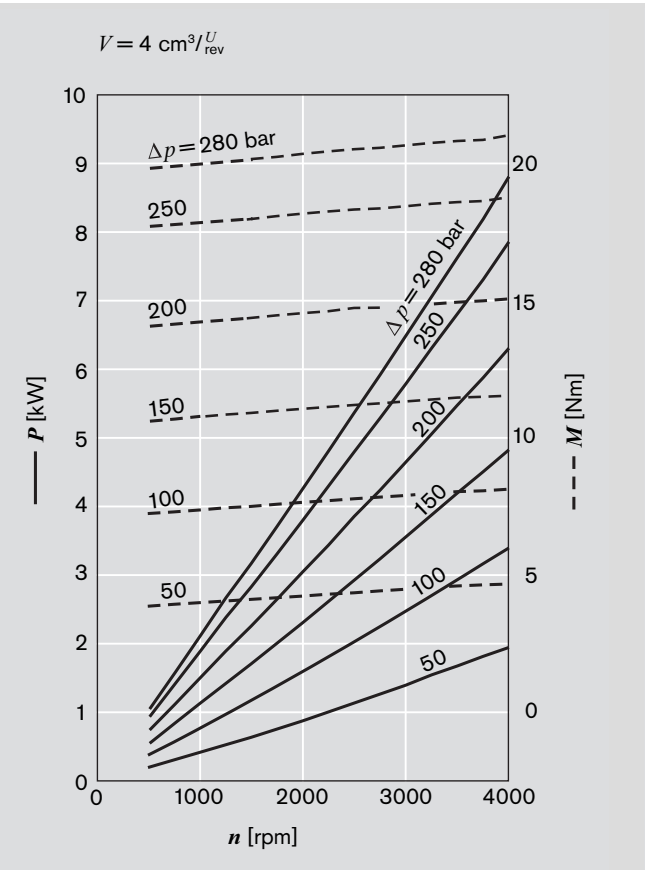

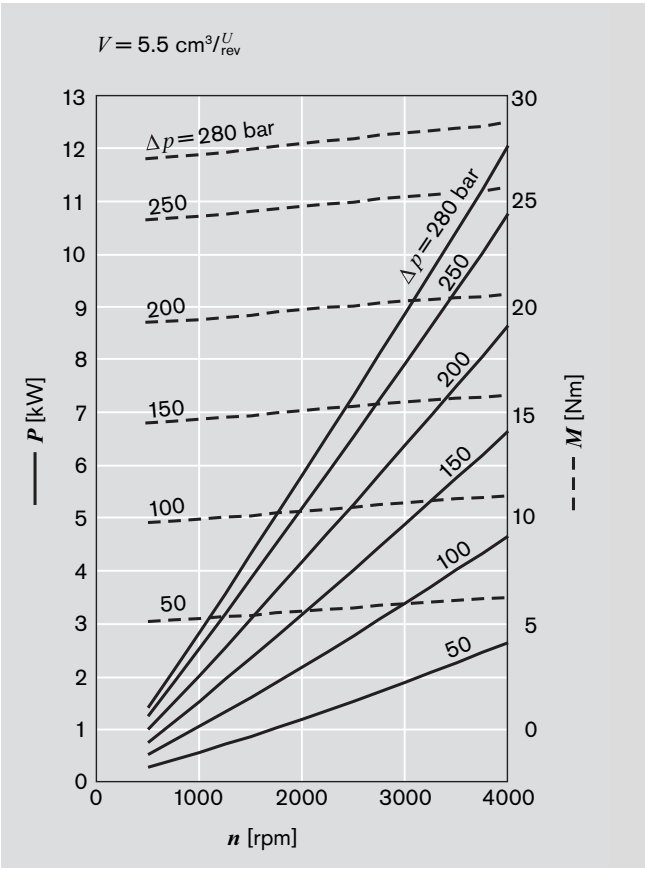

Performance charts (continued)

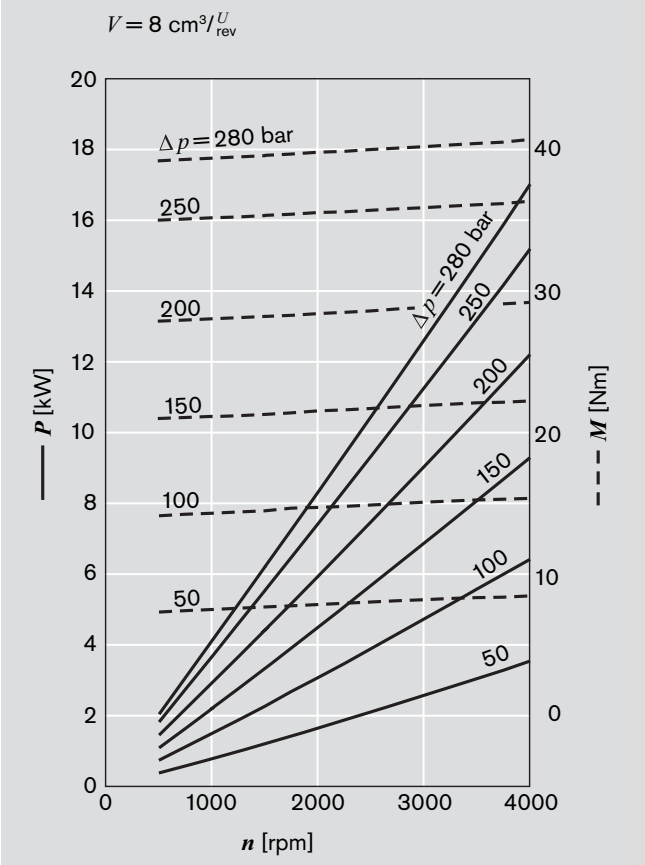

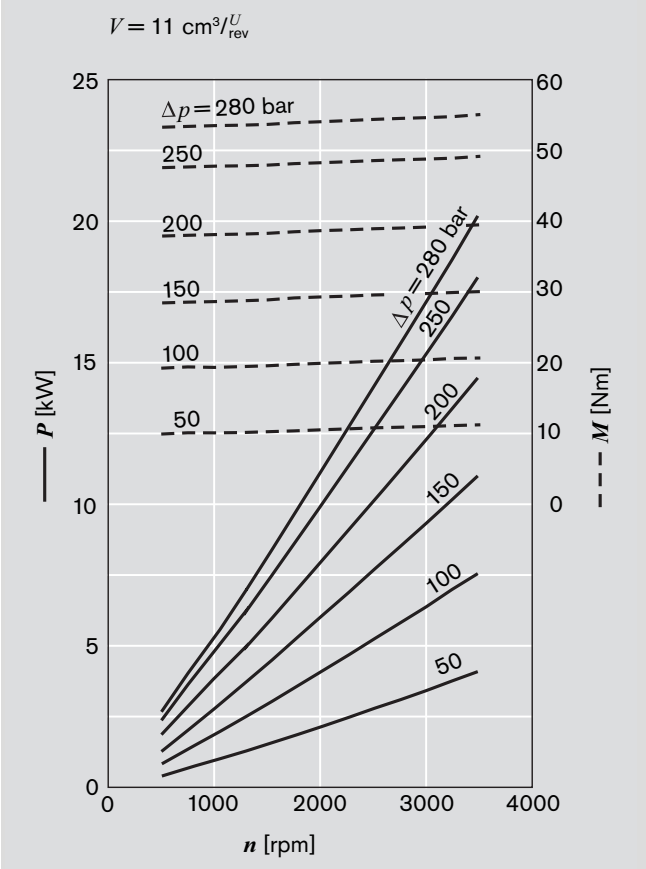

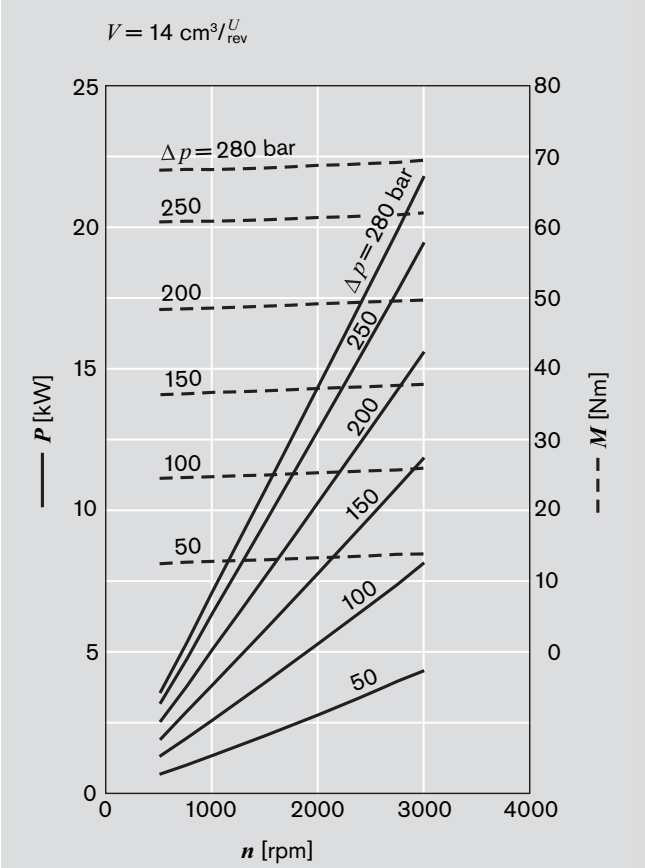

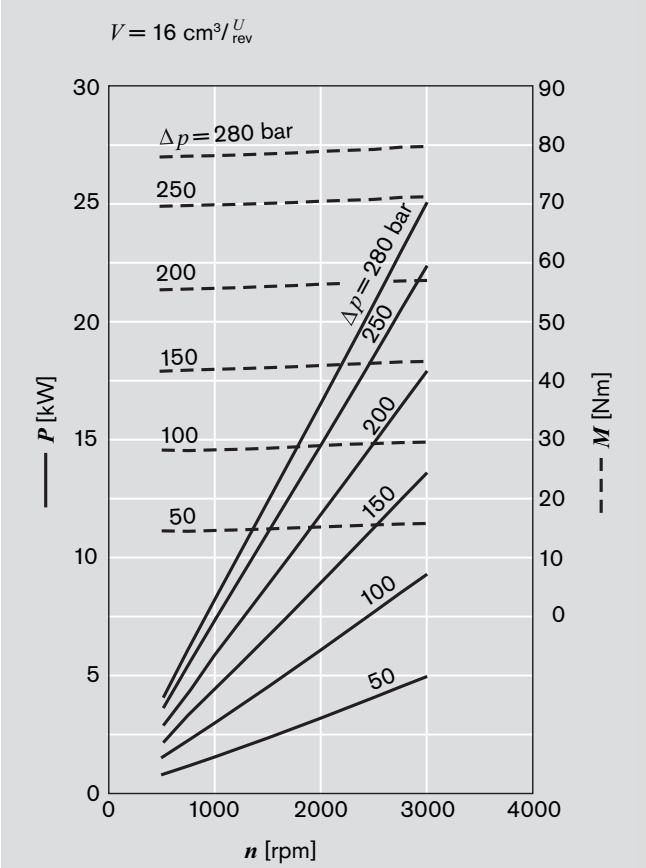

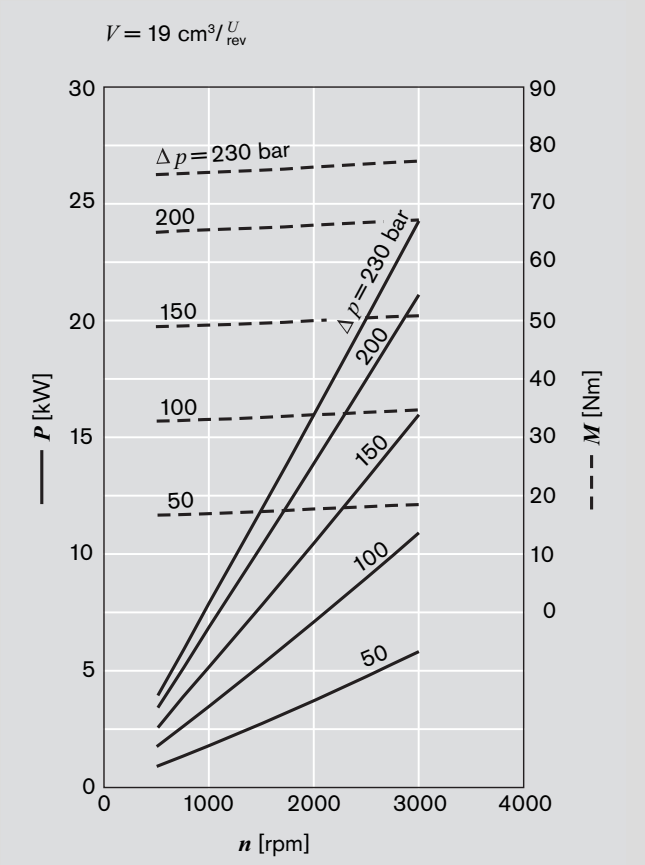
V = 19 cm³/U rev
Δp = 230 bar
200
150
100
50
Δp = 230 bar
200
150
100
50
P [kW]
M [Nm]
n [rpm]
0
1000
2000
3000
4000

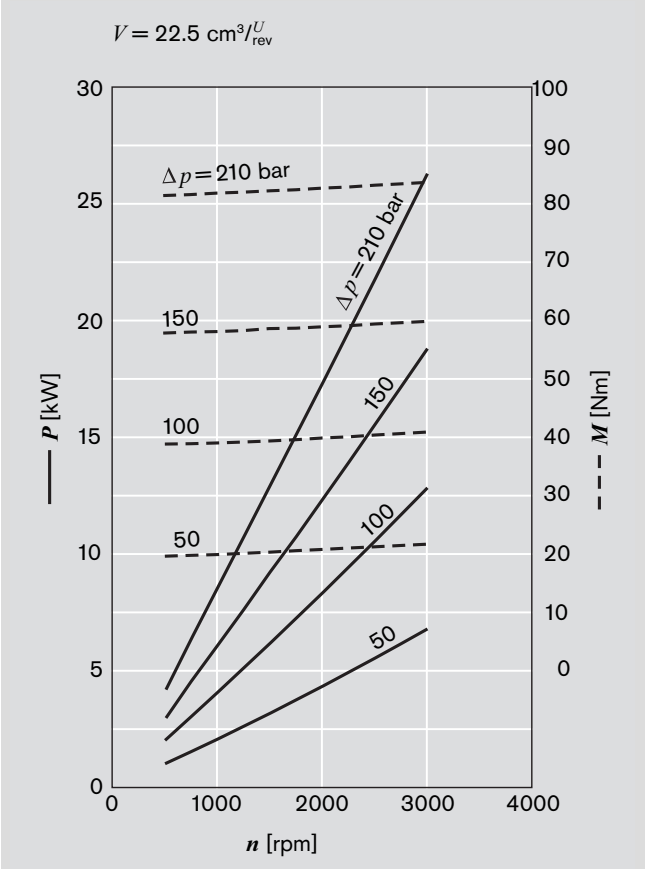
V = 22.5 cm³/U rev
Δp = 210 bar
150
100
50
Δp = 210 bar
150
100
50
P [kW]
M [Nm]
n [rpm]
0
1000
2000
3000
4000

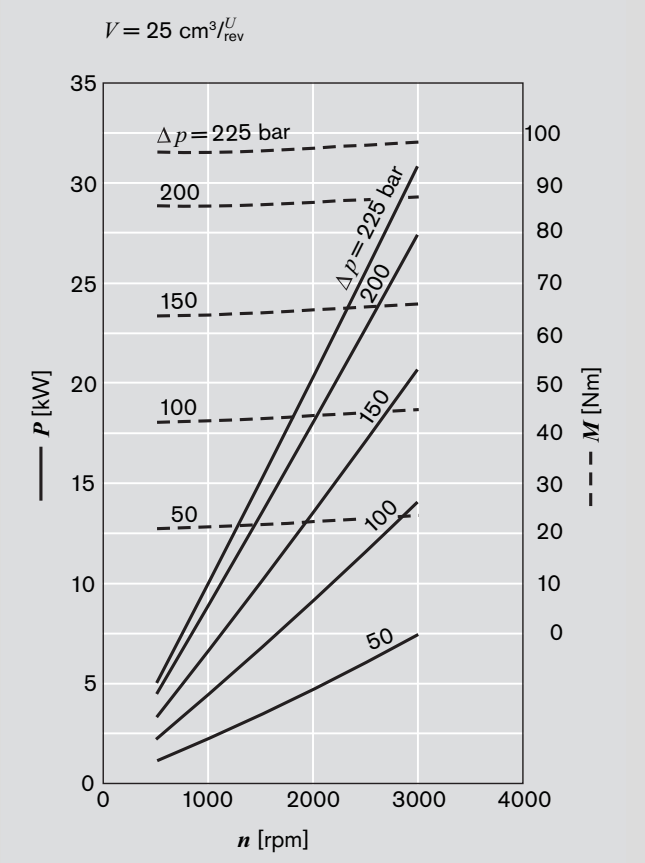
V = 25 cm³/U rev
Δp = 225 bar
200
150
100
50
Δp = 225 bar
200
150
100
50
P [kW]
M [Nm]
n [rpm]
0
1000
2000
3000
4000

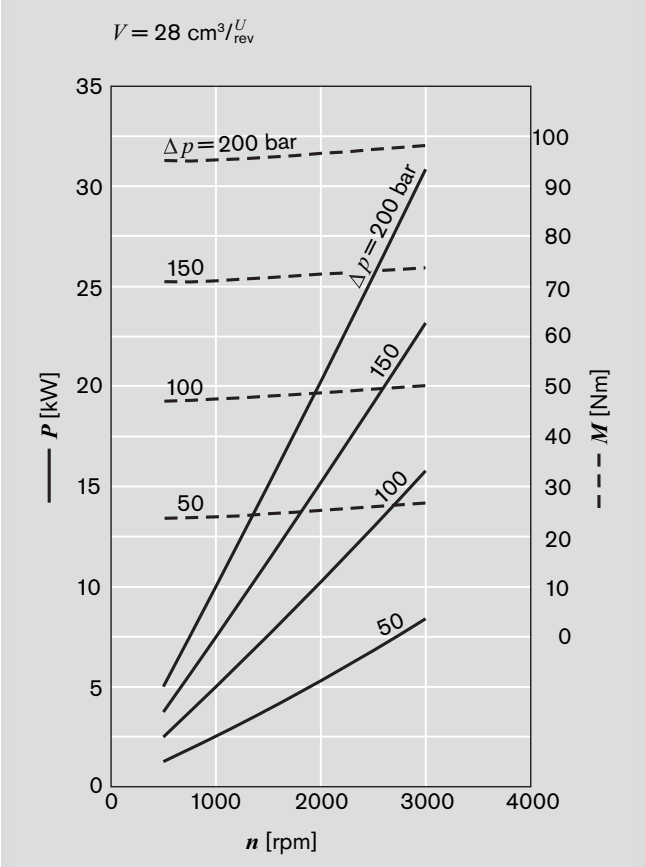
V = 28 cm³/U rev
Δp = 200 bar
150
100
50
Δp = 200 bar
150
100
50
P [kW]
M [Nm]
n [rpm]
0
1000
2000
3000
4000

Noise charts

Noise level dependent on rotational speed, pressure range between 10 bar and pressure value p_2 (see page 16 Specifications table).
Oil data: $\nu = 32$ mm²/s, $\vartheta = 50$ °C.
Sound pressure level calculated from noise measurements made in the sound absorbent measuring room compliant with DIN 45 635, Part 26.
Spacing between measuring sensor – pump: 1 m.

These are typical characteristic values for the respective model. They describe the airborne sound emitted solely by the pump. Environmental influences (installation site, piping, further system components) are not taken into consideration.
Each value applies for a single pump.

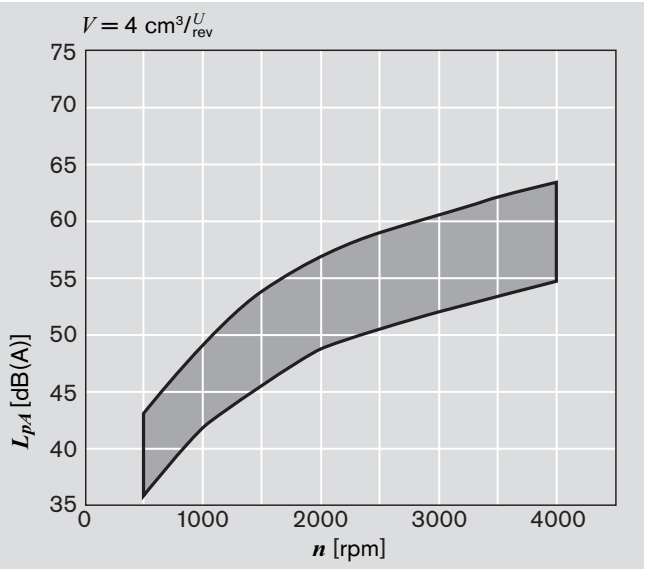

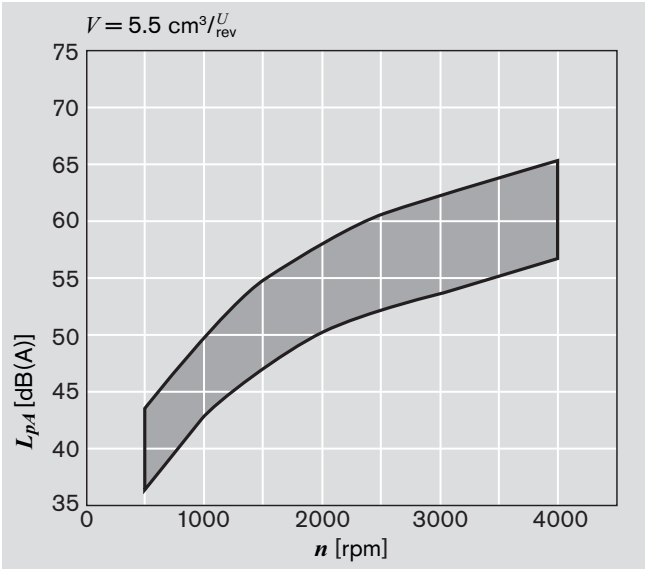

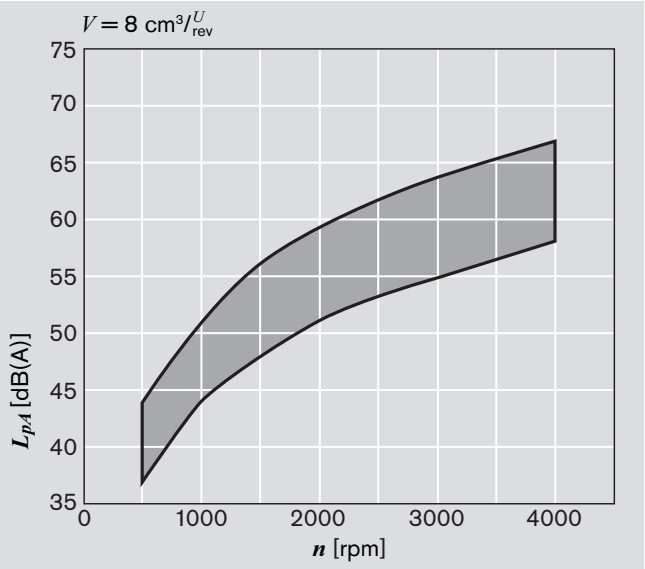

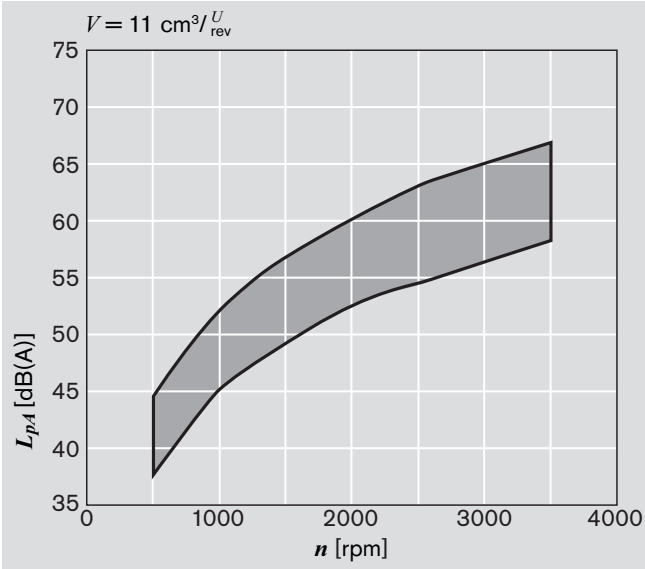

Noise charts (continued)

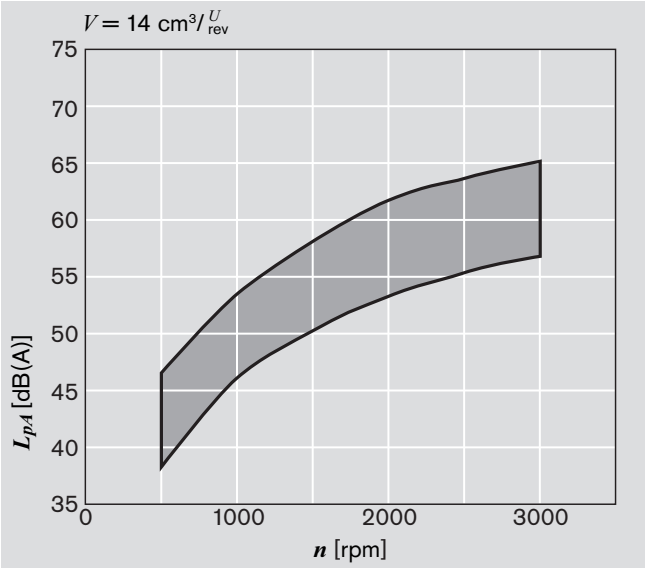

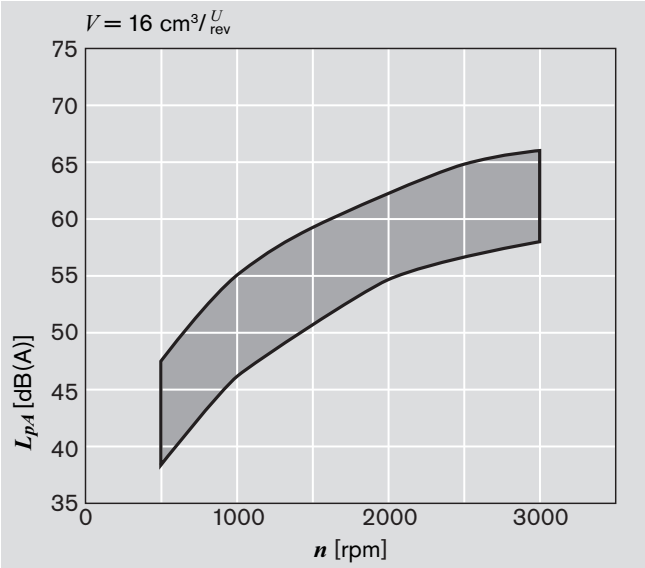

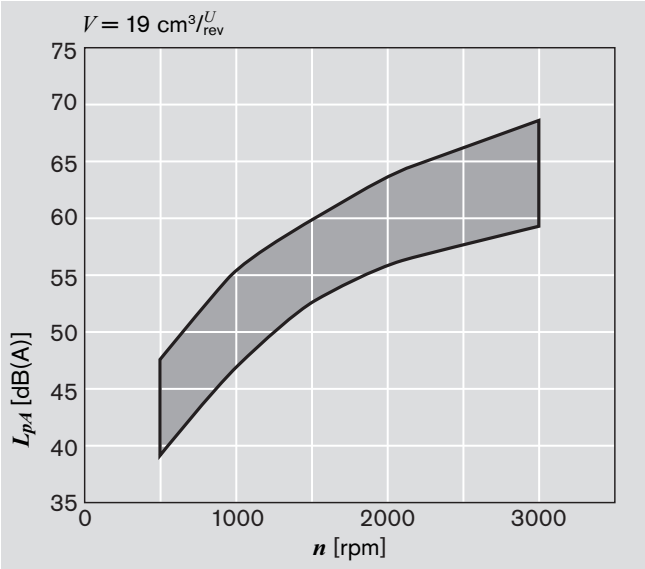

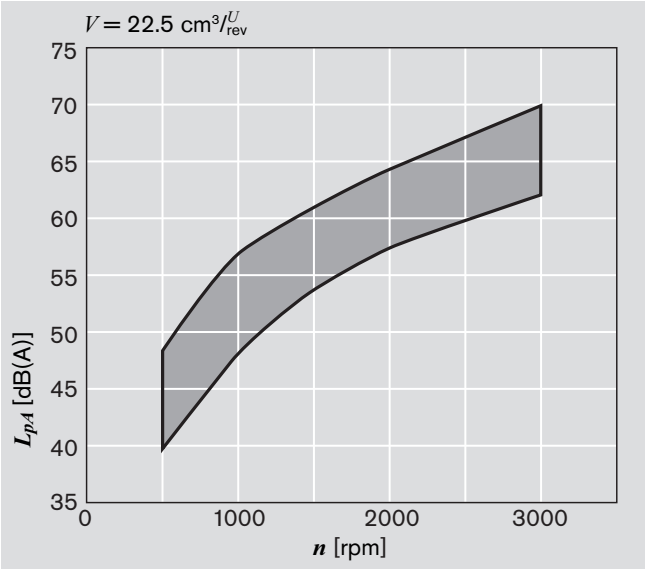

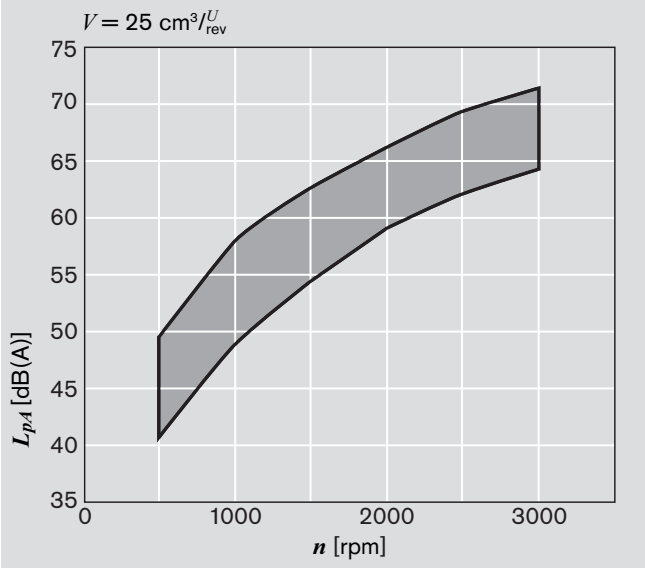

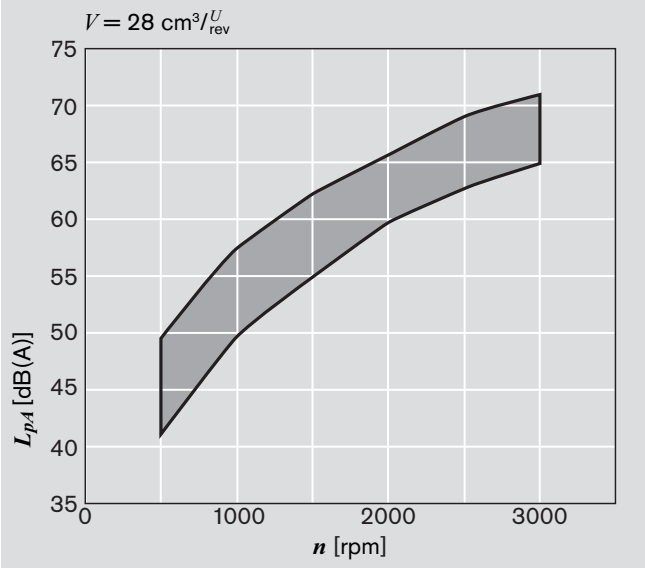

Specification

General	
Construction	External gear pump
Mounting	Flange or through-bolting with spigot
Line ports	Screw, flange
Direction of rotation (looking on shaft)	Clockwise or counter-clockwise, the pump may only be driven in the direction indicated
Installation position	Any
Load on shaft	Radial and axial forces after consulting
Ambient temperature range	–30 °C...+80 °C or max. 110 °C with FPM seal
Fluids	– Mineral oil compliant with DIN 51 524, 1–3, however under higher load at least HLP compliant with DIN 51 524 Part 2 recommended. – Comply with RE 90220 – Further operating fluids possible after consultation
Viscosity	12...800 mm^2/s permitted range 20...100 mm^2/s recommended range ...2000 mm^2/s range permitted for starting
Fluid temperature range	max. +80 °C with NBR seals*) max. +110 °C with FPM seals**)
Filtration ***)	At least cleanliness level 21/18/15 compliant with ISO 4406 (1999)

*) NBR = Perbunan®
**) FPM = Viton®
***) During the application of control systems or devices with critical counter-reaction, such as steering and brake valves, the type of filtration selected must be adapted to the sensitivity of these devices/systems.

Safety requirements pertaining to the whole systems are to be observed.

In the case of applications with high numbers of load cycles please consulting.

Definition of direction of rotation

Always look on the drive shaft.
Caution: Dimensions drawings always show clockwise-rotation pumps. On counter-clockwise-rotation pumps the positions of the drive shaft and the suction and pressure ports are different.

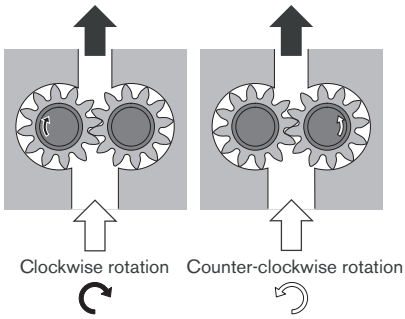

Definitions of pressures

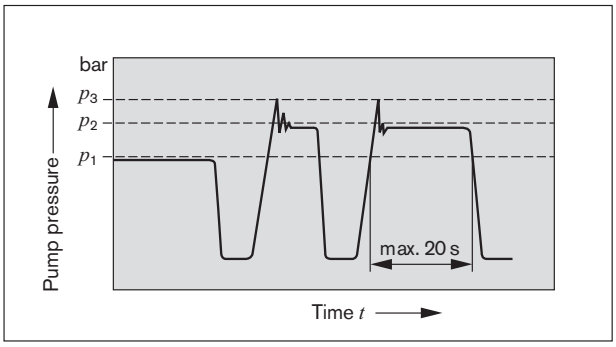

p_1 max. continuous pressure
p_2 max. intermittent pressure
p_3 max. peak pressure

AZPF-1x *)

Displacement	V	cm³/rev	4	5.5	8	11	14	16	19	22.5	22.5
Suction pressure	p_e	bar	0.7...3 (absolute), with tandem pumps: p_e (p_2) = max. 0.5 > p_e (p_1)								
Max. continuous pressure	p_1	bar	250						210	180	210
Max. intermittent pressure	p_2	bar	280						230	210	230
Max. peak pressure	p_3	bar	300						250	230	250
Min. rotational speed	<100	rpm	600	500	500	500	500	500	500	500	500
at bar 12 mm^2/s	100...180	rpm	1200	1200	1000	1000	800	800	800	800	800
	180... p_2	rpm	1400	1400	1400	1200	1000	1000	1000	1000	1000
25 mm^2/s	p_2	rpm	700	700	700	600	500	500	500	500	500
Max. rotational speed at	p_2	rpm	4000			3500	3000	3000	3000	2500	3000

*) Version with extended bearings

AZPF-2x

Displacement	V	cm³/rev	4	5.5	8	11	14	16	19	22.5	25	28
Suction pressure	p_e	bar	0.7...3 (absolute), with tandem pumps: p_e (p_2) = max. 0.5 > p_e (p_1)									
Max. continuous pressure	p_1	bar	250							220	195	170
Max. intermittent pressure	p_2	bar	280							250	225	200
Max. peak pressure	p_3	bar	300							290	265	240
Min. rotational speed	<100	rpm	600	500	500	500	500	500	500	500	500	500
at bar 12 mm^2/s	100...180	rpm	1200	1200	1000	1000	800	800	800	800	800	800
	180... p_2	rpm	1400	1400	1400	1200	1000	1000	1000	1000	1000	1000
25 mm^2/s	p_2	rpm	700	700	700	600	500	500	500	500	500	500
Max. rotational speed at	p_2	rpm	4000			3500	3000	3000	3500	3500	3000	3000

Drive arrangements

1. Flexible couplings
The coupling must not transfer any radial or axial forces to the pump.

The maximum radial runout of shaft spigot is 0.2 mm.

Refer to the fitting instructions provided by the coupling manufacturer for details of the maximum permitted shaft misalignment.

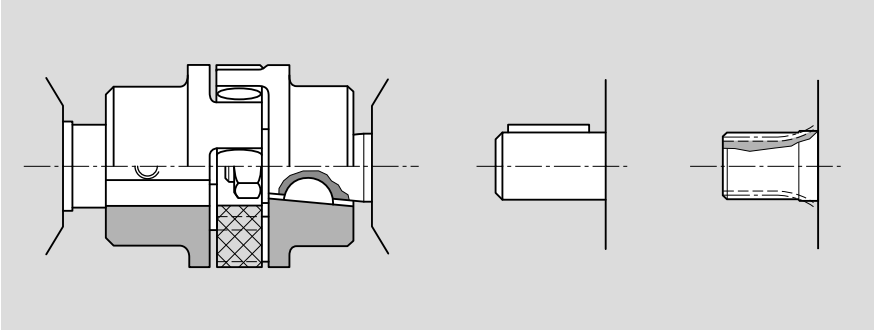

2. Coupling sleeve
Used on shafts with DIN or SAE splining. Caution: There must be no radial or axial forces exerted on the pump shaft or coupling sleeve. The coupling sleeve must be free to move axially. The distance between the pump shaft and drive shaft must be 2^{+1}. Oil-bath or oil-mist lubrications is necessary.

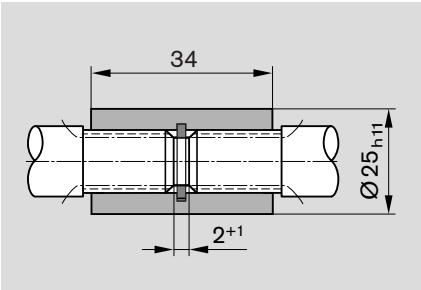

Splined shaft	M_{max} [Nm]	V [cm³/rev]	p_{max} [bar]
DIN	100	4...28	p_{max}
SAE 9t	110		
SAE 11t	180		

3. Drive shaft with tang
For the close-coupling of the pumps to electric motor or internal-combustion engine, gear, etc.
The pump shaft has a special tang and driver ③ (not included in supply).
There is no shaft sealing.

The recommended arrangements and dimensions for the drive end and sealing are as follows.

① Drive shaft
Case-hardening steel DIN 17 210
e.g. 20 MnCrS 5
case-hardened 0.6 deep; HRC 60 ±3.
Surface for sealing ring
ground without rifling $R_{max.} \leq 4\mu m$

② Radial shaft seal ring
Rubber-covered seal (see DIN 3760, Type AS or double-lipped ring).
Cut 15° chamfer or fit shaft seal ring with protection sleeve.

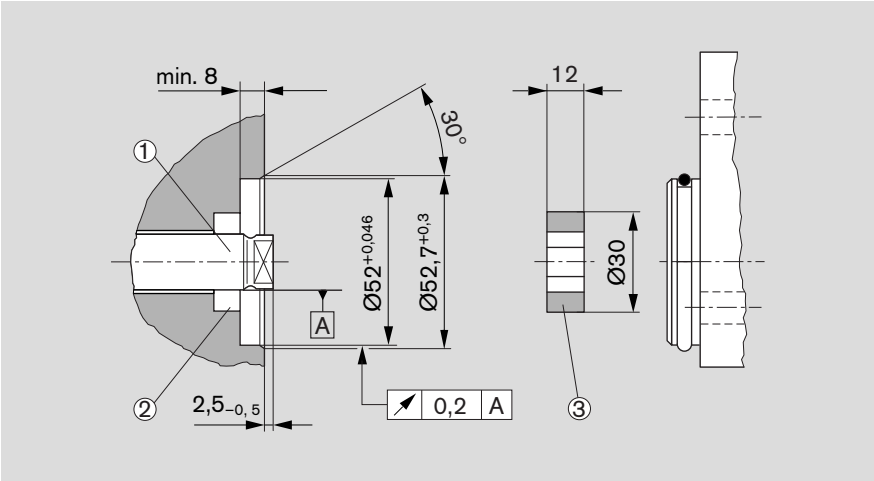

Drive with tang

AZPF-1x

$M_{max.}$ [Nm]	V [cm³/rev]	$p_{max.}$ [bar]
65	4...14	280
	16	230
65	19	190
	22.5	160

AZPF-2x

$M_{max.}$ [Nm]	V [cm³/rev]	$p_{max.}$ [bar]
85	4...14	280
	16	280
	19	250
	22.5	210
	25	190
	28	170

4. V-belts and gearwheels without outboard bearing

When proposing to use V-belt or gear drive, please submit details of the application for our comments (especially dimensions a, d_m, d_w and angle α).

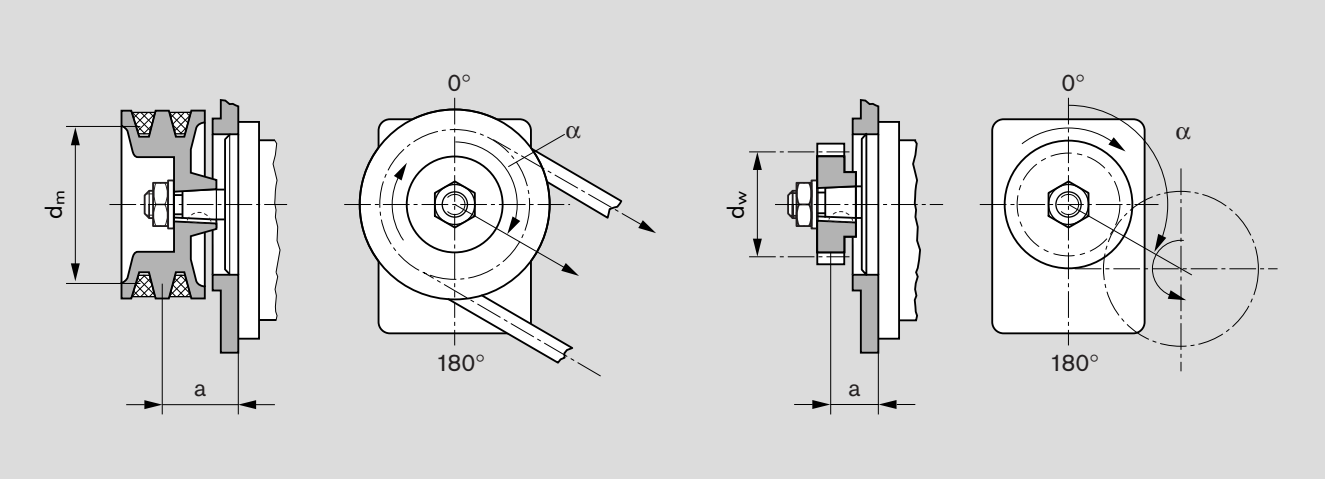

5. Outboard bearing

Outboard bearing eliminate possible problems when the pumps are driven by V-belts or gearwheels. The diagrams below show the maximum radial and axial loads that can be tolerated based on a bearing life of L_H = 1000 hours.

$M_{max.}$ [Nm]	V [cm³/rev]	$p_{max.}$ [bar]
65	16	230
	19	190
	22.5	160

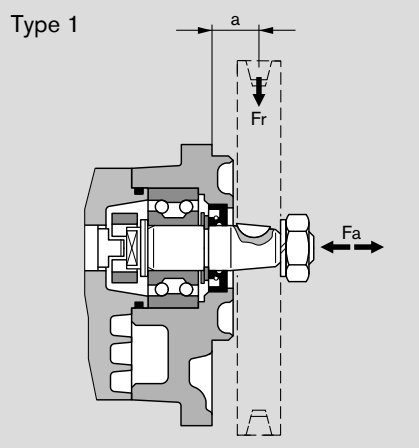

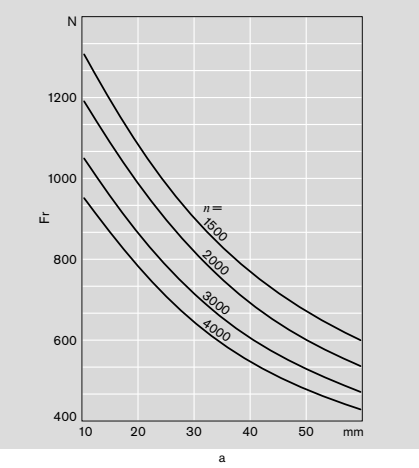

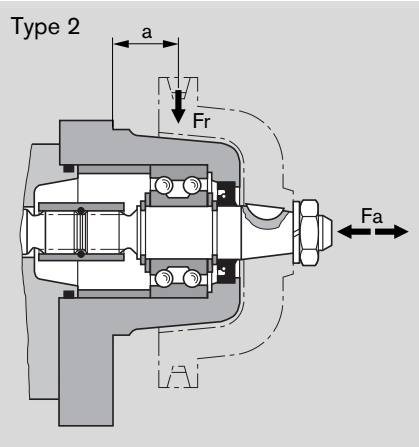

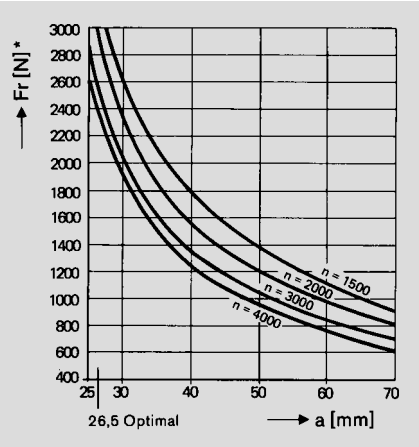

Multiple gear pumps

Gear pumps are well-suited to tandem combinations of pumps in which the drive shaft of the first pump is extended to drive a second pump and sometimes a third pump in the same manner. A coupling is fitted between each pair of pumps.
In most cases each pump is isolated from its neighbor, i.e. the suction ports are separate from one another. A common suction port is also possible as an option.
Caution: Basically, the specifications for the single pumps apply, but with certain restrictions:
Max. speed: This is determined by the highest rated pump speed in use.
Pressures: These are restricted by the strength of the drive shaft, the through drives and the drivers. Appropriate data is given in the dimensional drawings.

Pressure restrictions during standard through drive
In the case of series S, the driver for the second pumping stage can carry a load of up to $M_{max.}$ = 65 Nm, i.e. there is a pressure restriction for the second stage and any further stages.

$M_{max.}$ [Nm]	V [cm³/rev]	$p_{max.}$ [bar]
65	16	230
	19	190
	22.5	160
	25	140
	28	130

If the first stage is driven through a tang (driver) or outboard bearing type 1, pressure restrictions apply as indicated in the formula below.

Reinforced through drives are available for applications with higher transfer torques and/or rotational vibrations. Customized designs available on request.

Reinforced through drive

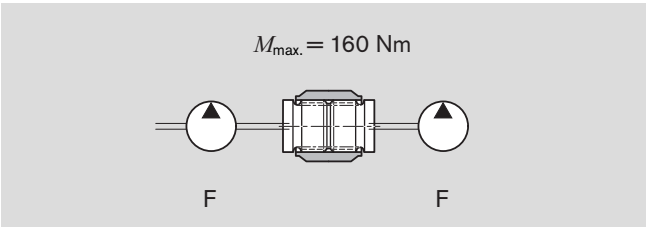

Standard through drive

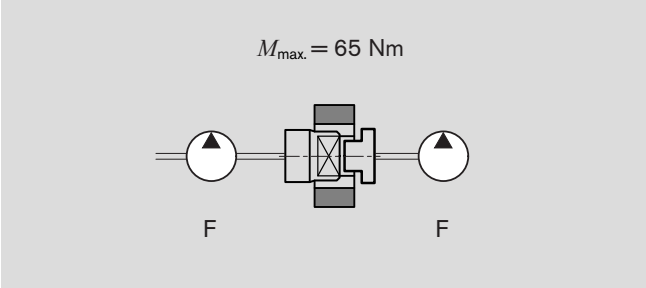

Combinations

Series pump 1	$M_{max.}$ [Nm]	Series pump 2
F	65	F
F	65	S
F	12	B

Max. transferrable drive torque *

Function	Code letter	Designation	Max. transferrable drive torque * [Nm]
Splined shafts	R	SAE J744 16-4 9T	110
	P	SAE J744 19-4-11T	180
Tapered key shaft	C	1:5	155
	H	1:8	160
Cylinder shafts	G	Shafts Ø 15.875	55
	A	Shafts Ø 18	75
Claw	N	Dihedral claw	65

* These values only apply when the conditions described on page 16 are complied with. Bosch Rexroth is to be consulted if the stated values are exceeded.

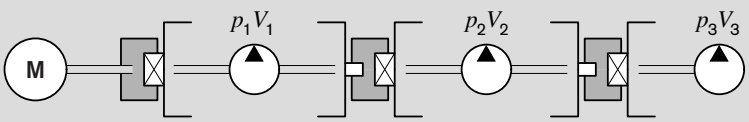

$$M_{max.} \geqq \Delta p_1 \cdot V_1 \cdot 0.0177 + \Delta p_2 \cdot V_2 \cdot 0.0177 + \Delta p_3 \cdot V_3 \cdot 0.0177$$

Δp [bar] V [cm³/rev]

Unit dimensions

Standard range

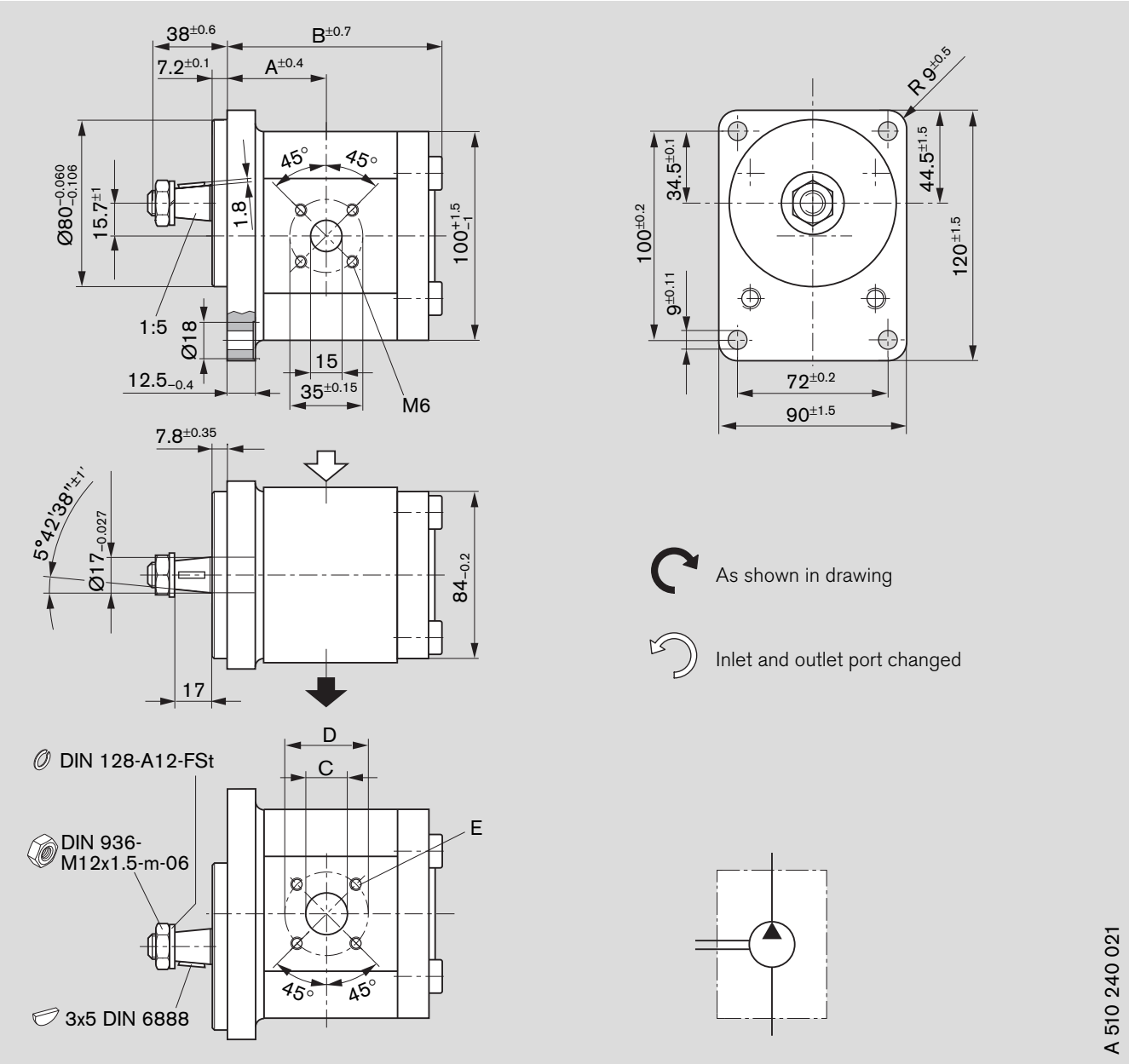

Ordering code

AZPF – 10 – ☐☐☐ ☐ C B 20 M B

AZPF – 11 – ☐☐☐ ☐ C B 20 M B*

Displacement [cm³/rev]	Ordering-No. L	Ordering-No. R	Max. operating pressure [bar]	Max. rotation speed [rpm]	kg	Dimension [mm] A	B	C	D	E
4	**0 510 225 306**	**0 510 225 006**	280	4000	3.2	39.9	85.0	15	40	M6 depth 13
5.5	**0 510 325 306**	**0 510 325 006**	280	4000	3.2	41.1	87.5	15	40	
8	**0 510 425 307**	**0 510 425 009**	280	4000	3.3	43.2	91.6	20	40	
11	**0 510 525 311**	**0 510 525 009**	280	3500	3.5	47.0	96.6	20	40	
14	**0 510 525 319**	**0 510 525 018**	280	3000	3.7	47.5	101.6	20	40	
16	**0 510 625 315**	**0 510 625 022**	280	3000	3.7	47.5	105.0	20	40	
19	**0 510 625 314**	**0 510 625 013**	230	3500	3.8	47.5	110.0	20	40	
22.5	**0 510 725 330***	**0 510 725 030**	210	2500	3.8	55.1	115.4	20	40	

Unit dimensions

Standard range

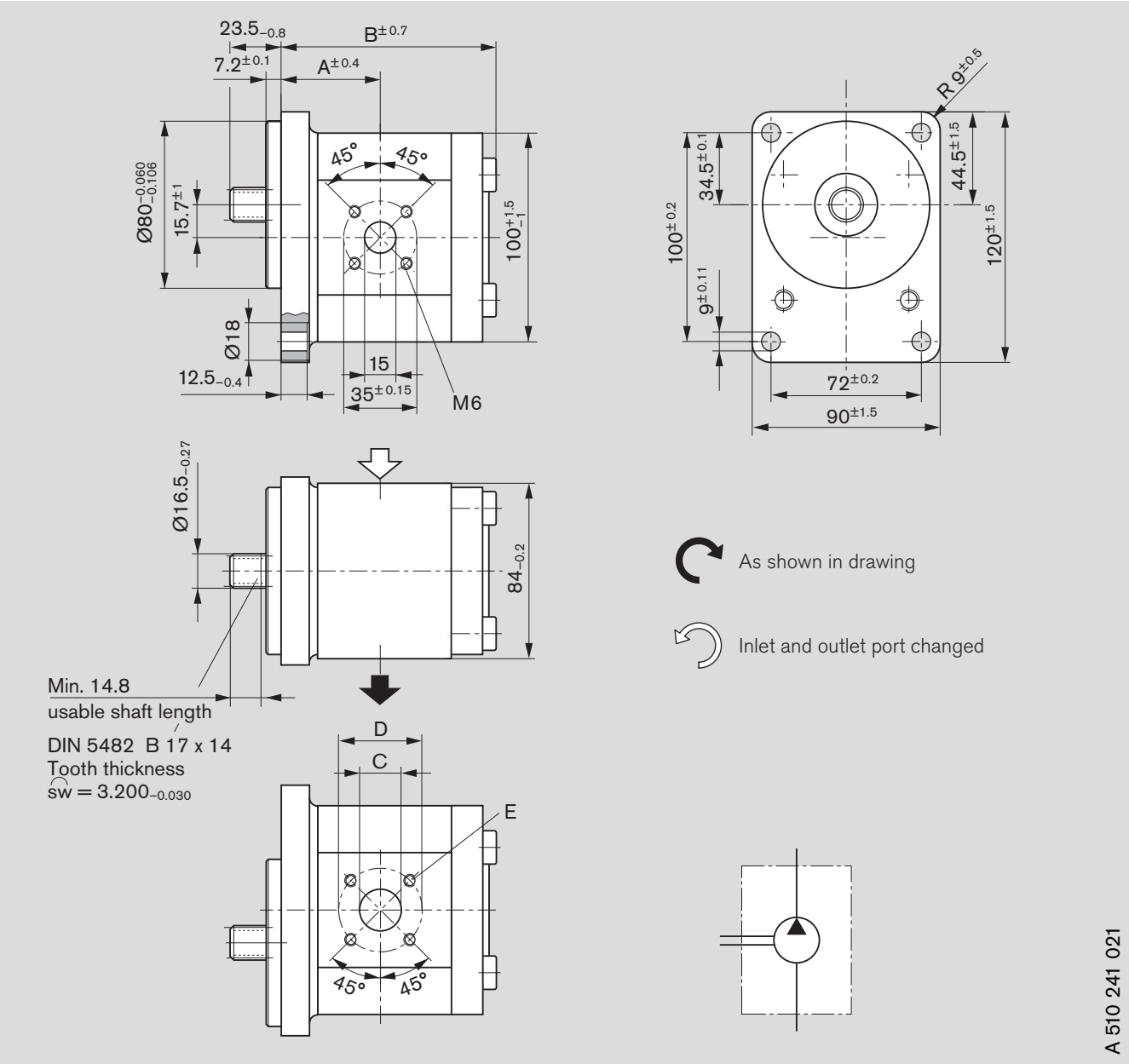

Ordering code

AZPF – 10 – ☐☐☐ ☐ F B 20 M B

AZPF – 11 – ☐☐☐ ☐ F B 20 M B*

Displacement [cm³/rev]	Ordering-No. L	Ordering-No. R	Max. operating pressure [bar]	Max. rotation speed [rpm]	kg	Dimension [mm] A	B	C	D	E
4	**0 510 225 307**	**0 510 225 007**	280	4000	3.1	39.9	85.0	15	40	M6 depth 13
5.5	**0 510 325 307**	**0 510 325 007**	280	4000	3.2	41.1	87.5	15	40	
8	**0 510 425 308**	**0 510 425 010**	280	4000	3.3	43.2	91.6	20	40	
9	**0 510 425 336***	**–**	280	4000	3.4	43.7	92.4	20	40	
11	**0 510 525 312**	**0 510 525 010**	280	3500	3.5	47.0	96.6	20	40	
14	**0 510 525 328**	**0 510 525 030**	280	3000	3.6	47.5	101.6	20	40	
16	**0 510 625 317**	**0 510 625 015**	280	3000	3.65	47.5	105.0	20	40	
19	**0 510 625 316**	**0 510 625 014**	230	3000	3.8	47.5	110.0	20	40	
22.5	**0 510 725 349**	**–**	230	3000	4.4	61.1	127.4	20	40	
22.5	**–**	**0 510 725 062**	210	2500	4.0	55.1	115.4	20	40	

Unit dimensions

Standard range

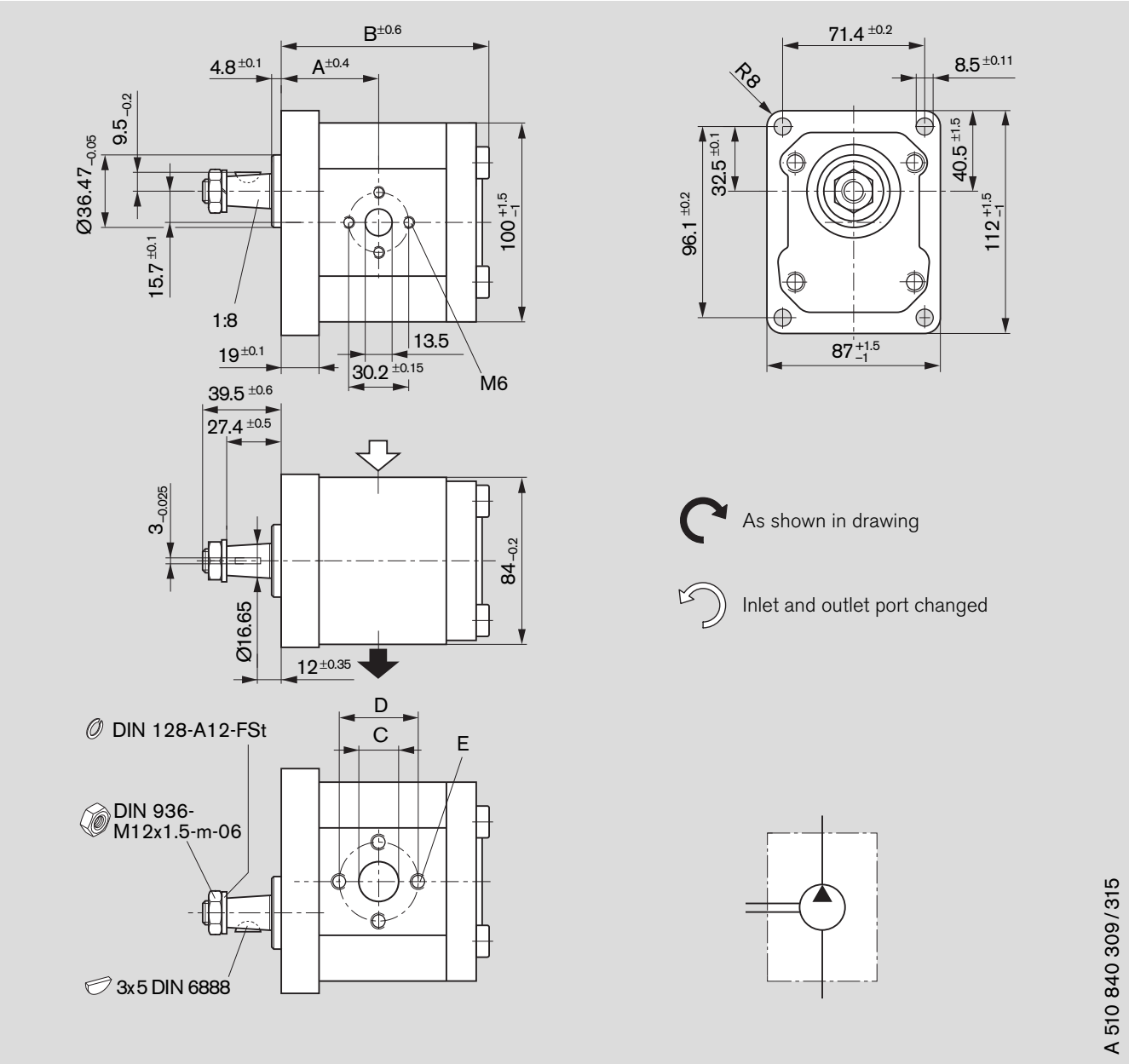

Ordering code

AZPF – 12 – ☐☐☐ ☐ H O 30 K B

AZPF – 22 – ☐☐☐ ☐ H O 30 K B*

Displacement [cm³/rev]	Ordering-No. L	Ordering-No. R	Max. operating pressure [bar]	Max. rotation speed [rpm]	kg	Dimension [mm] A	B	C	D	E
4	**0 510 225 317**	**0 510 225 022**	280	4000	3.1	41.4	84.1	13.5	30.2	M6 depth 13
5.5	**0 510 325 320**	**0 510 325 025**	280	4000	3.2	42.6	86.6	13.5	30.2	
8	**0 510 425 334**	**0 510 425 043**	280	4000	3.3	44.7	92.5	13.5	30.2	
11	**0 510 525 374**	**0 510 525 074**	280	3500	3.4	48.5	97.5	13.5	30.2	M8 depth 13
14	**0 510 525 375**	**0 510 525 075**	280	3000	3.6	49.0	102.5	13.5	30.2	
16	**0 510 625 381**	**0 510 625 075**	280	3000	3.6	49.0	105.9	13.5	30.2	
19	**0 510 625 386***	**0 510 625 076***	280	3500	4.1	59.9	121.1	20.0	39.7	
22.5	**0 510 725 410***	**0 510 725 112***	250	3500	4.2	62.6	126.5	20.0	39.7	
25	**0 510 725 411***	**0 510 725 113***	225	3000	4.4	64.7	132.5	20.0	39.7	
28	**0 510 725 412***	**0 510 725 114***	200	3000	4.5	67.1	137.3	20.0	39.7	

Unit dimensions

Standard range

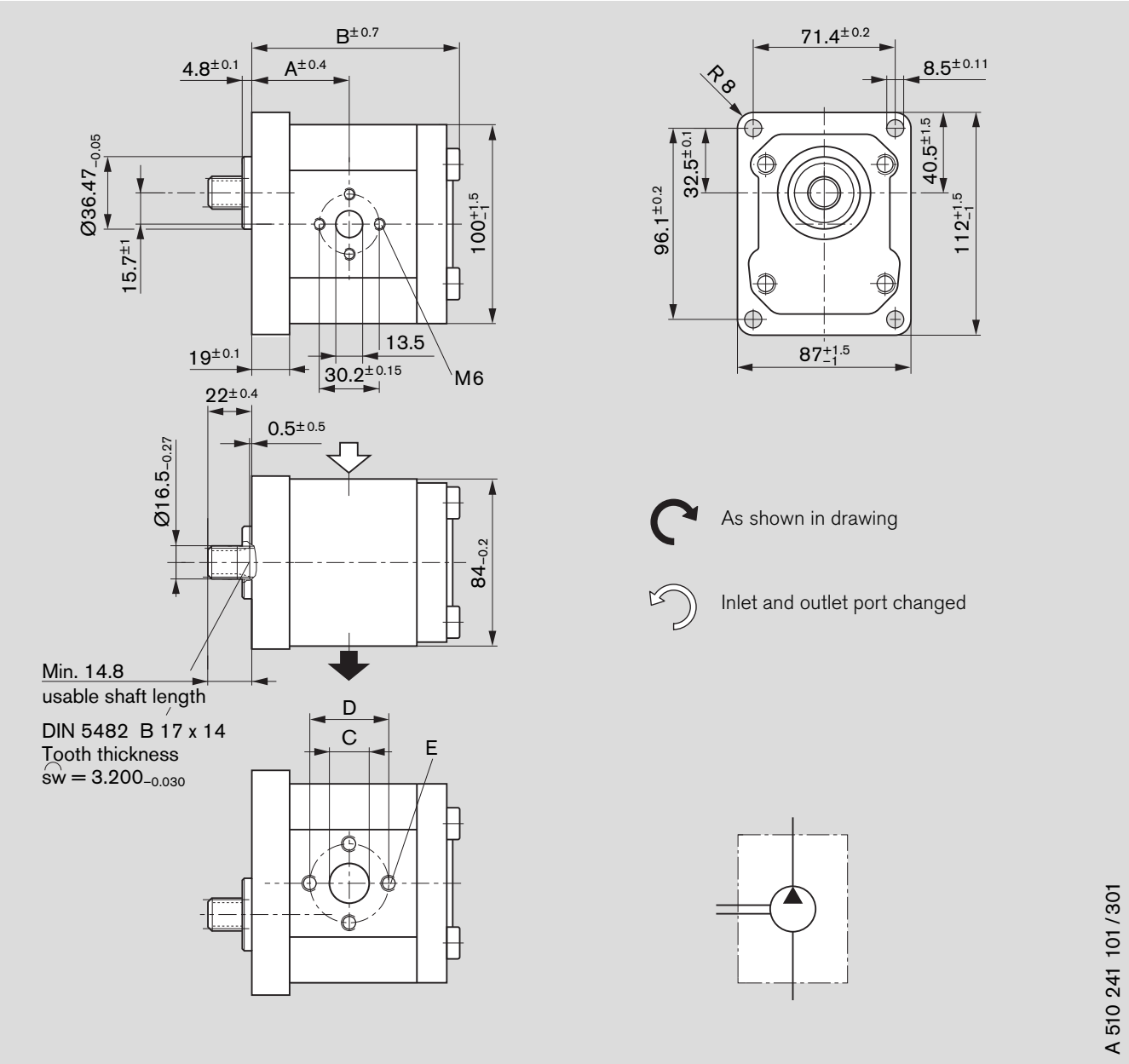

Ordering code

AZPF – 10 – ☐☐☐ ☐ F O 30 M B

AZPF – 10 – ☐☐☐ ☐ F O 30 P B*

Displacement [cm³/rev]	Ordering-No. L	Ordering-No. R	Max. operating pressure [bar]	Max. rotation speed [rpm]	kg	Dimension [mm] A	B	C	D	E
8	**0 510 425 315**	**0 510 425 021**	280	4000	3.3	44.7	93.1	13.5	30.2	M6, depth 13
11	**0 510 525 323**	**0 510 525 024**	280	3500	3.4	48.5	98.1	20.0	39.7	M8, depth 13
11	**0 510 525 331***	**–**	210	3500	3.3	48.5	98.1	20.0	39.7	
14	**–**	**0 510 525 034***	210	3000	3.4	49.0	103.1	20.0	39.7	
16	**0 510 625 327***	**0 510 625 039***	210	3000	3.5	49.0	106.5	20.0	39.7	
19	**–**	**0 510 625 049***	210	3000	3.7	49.0	111.5	20.0	39.7	
19	**0 510 625 332***	**–**	210	3000	4.0	59.9	123.5	20.0	39.7	
22.5	**0 510 725 348***	**0 510 725 076***	210	3000	4.2	62.6	127.8	20.0	39.7	

Unit dimensions

Standard range

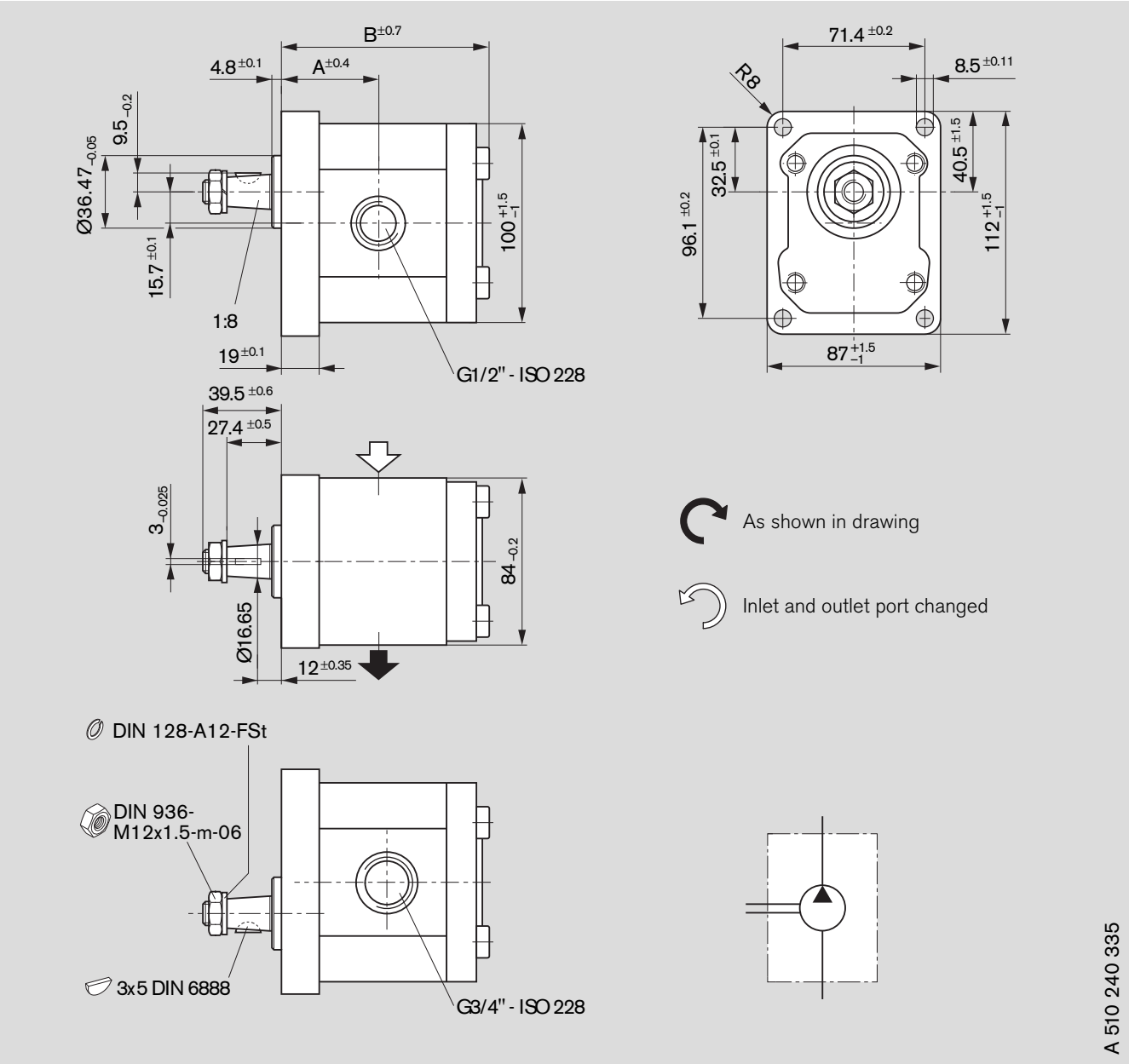

Ordering code

AZPF – 10 – ☐ ☐ ☐ ☐ H O 01 M B

Displacement [cm³/rev]	Ordering-No. L	Ordering-No. R	Max. operating pressure [bar]	Max. rotation speed [rpm]	kg	Dimension [mm] A	B	G
4	–	–	–	–	–	–	–	ISO 228 depth 16
5.5	–	**0 510 325 018**	280	4000	3.1	42.6	89.0	
8	–	**0 510 425 027**	280	4000	3.15	44.7	93.1	
11	–	**0 510 525 039**	280	3500	3.3	48.5	98.1	
14	–	**0 510 525 040**	280	3000	3.4	49.0	103.1	
16	–	**0 510 625 047**	280	3000	3.58	49.0	106.5	
19	–	**0 510 625 052**	230	3000	3.6	49.0	111.5	
22.5	–	**0 510 725 084**	210	2500	3.8	56.6	116.4	

Unit dimensions

Standard range

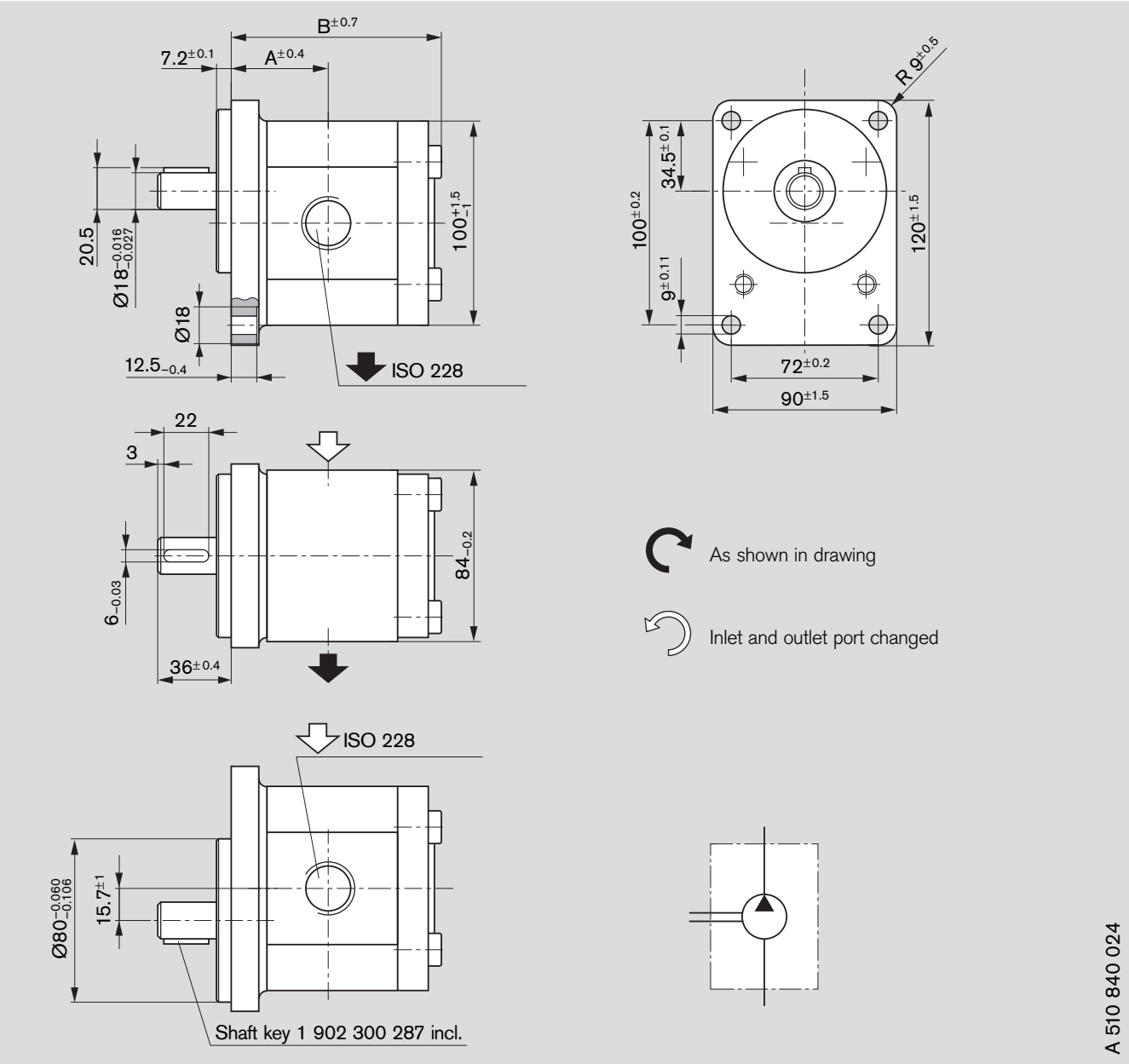

Ordering code

AZPF – 11 – ☐ ☐ ☐ ☐ A B 01 M B

Displacement [cm³/rev]	Ordering-No. L	Ordering-No. R	Max. operating pressure [bar]	Max. rotation speed [rpm]	kg	Dimension [mm] A	B	G
4	**0 510 225 318**	**0 510 225 023**	280	4000	3.3	39.9	84.3	G 1/2 – ISO 228 depth 16
5.5	**0 510 325 321**	**0 510 325 026**	280	4000	3.3	41.1	85.2	
8	**0 510 425 335**	**0 510 425 044**	280	4000	3.4	43.2	89.3	
11	**0 510 525 376**	**0 510 525 076**	280	3500	3.6	45.6	94.3	G 3/4 – ISO 228 depth 16
14	**–**	**–**	–	–	–	–	–	
16	**0 510 625 382**	**0 510 625 077**	250	3000	3.8	49.9	102.7	
19	**–**	**–**	–	–	–	–	–	
22.5	**0 510 725 418**	**0 510 725 120**	180	2500	4.1	55.1	114.7	

Unit dimensions

Standard range

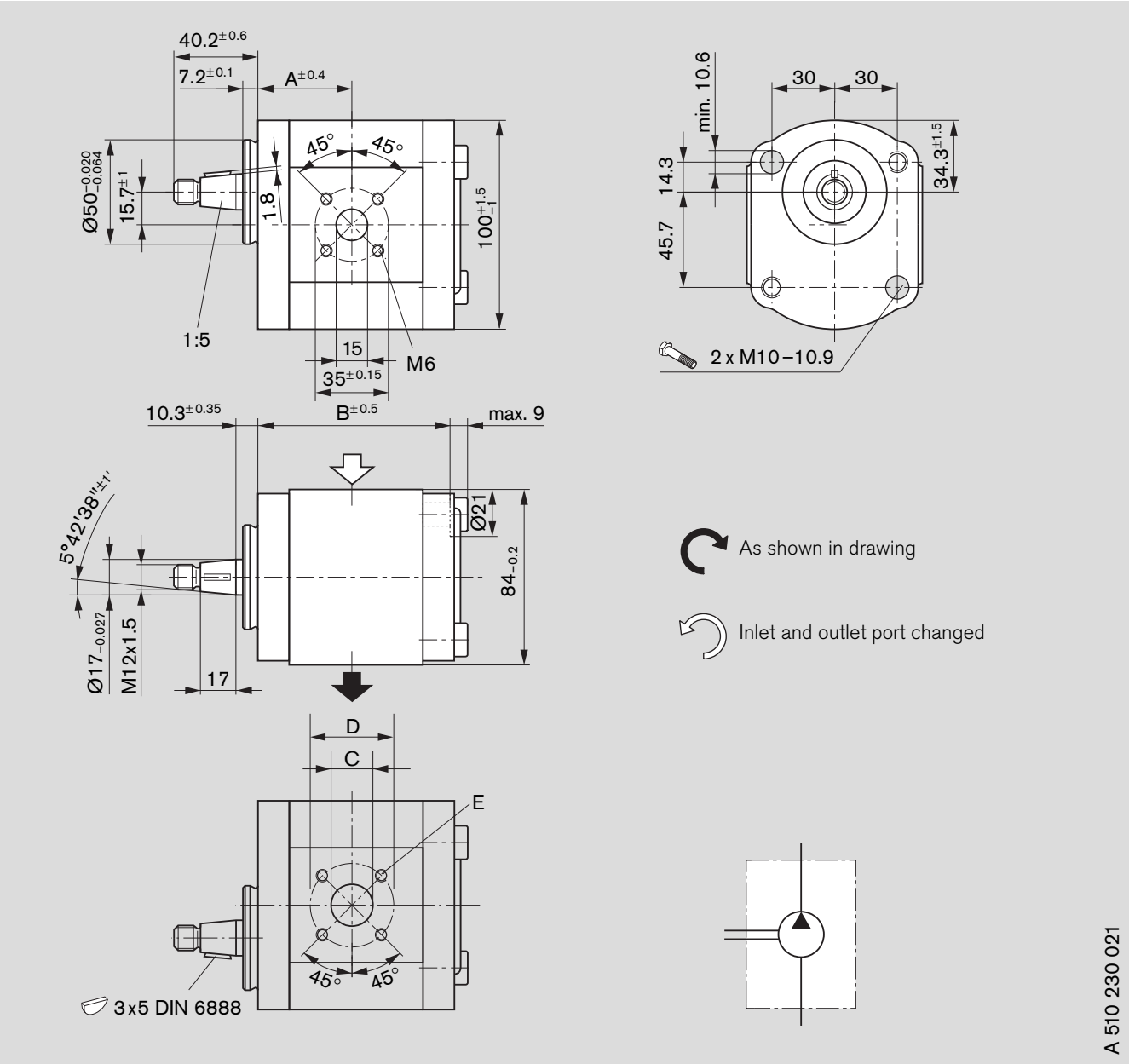

Ordering code

AZPF – 10 – ☐☐☐ ☐ C P 20 M B
AZPF – 10 – ☐☐☐ ☐ C P 20 K B*
AZPF – 11 – ☐☐☐ ☐ C P 20 M B**

Displacement [cm³/rev]	Ordering-No. L	Ordering-No. R	Max. operating pressure [bar]	Max. rotation speed [rpm]	kg	Dimension [mm] A	B	C	D	E
4	**0 510 215 009**	**0 510 215 309**	280	4000	2.5	37.7	73.7	15	40	M6 depth 13
5.5	**0 510 315 307**	**0 510 315 006**	280	4000	2.65	38.6	76.2	15	40	
8	**0 510 415 316****	**–**	280	4000	2.7	40.6	80.3	20	40	
11	**0 510 515 309**	**0 510 515 007**	280	3500	2.75	44.5	85.5	20	40	
14	**0 510 515 316**	**0 510 515 018**	280	3000	3.1	45.0	90.3	20	40	
16	**0 510 615 317**	**0 510 615 010**	280	3000	2.9	45.0	93.7	20	40	
19	**0 510 615 318**	**0 510 615 005**	230	3000	3.2	45.0	98.7	20	40	
22.5	**0 510 715 306***	**–**	210	2500	3.3	52.5	104.1	20	40	

Unit dimensions

Standard range

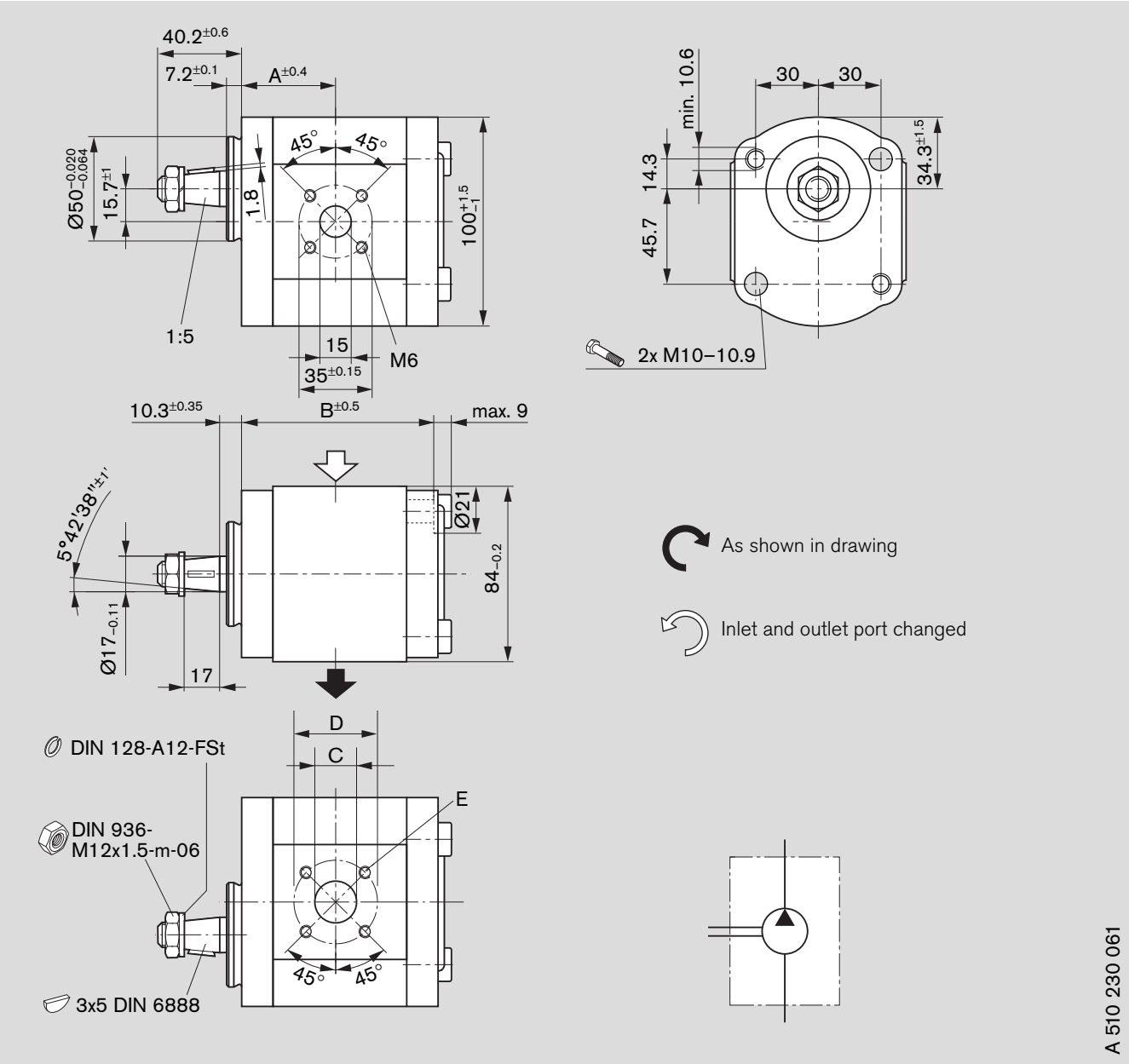

Ordering code

AZPF – 10 – ☐☐☐ ☐ C N 20 M B

AZPF – 11 – ☐☐☐ ☐ C N 20 M B*

Displacement [cm³/rev]	Ordering-No. L	Ordering-No. R	Max. operating pressure [bar]	Max. rotation speed [rpm]	kg	Dimension [mm] A	B	C	D	E
4	**0 510 215 306**	**0 510 215 006**	280	4000	2.6	37.4	73.7	15	40	M6 depth 13
5.5	**0 510 315 304**	**0 510 315 004**	280	4000	2.6	38.6	76.2	15	40	
8	**0 510 415 313**	**0 510 415 005**	280	4000	2.8	40.7	80.3	20	40	
11	**0 510 515 310**	**0 510 515 004**	280	3500	2.9	44.5	85.3	20	40	
14	**–**	**0 510 515 015***	280	3000	3.0	45.0	90.3	20	40	
16	**0 510 615 314**	**0 510 615 006**	280	3000	3.1	45.0	93.7	20	40	
19	**0 510 615 341**	**–**	230	3000	3.2	45.0	98.7	20	40	

Unit dimensions

Standard range

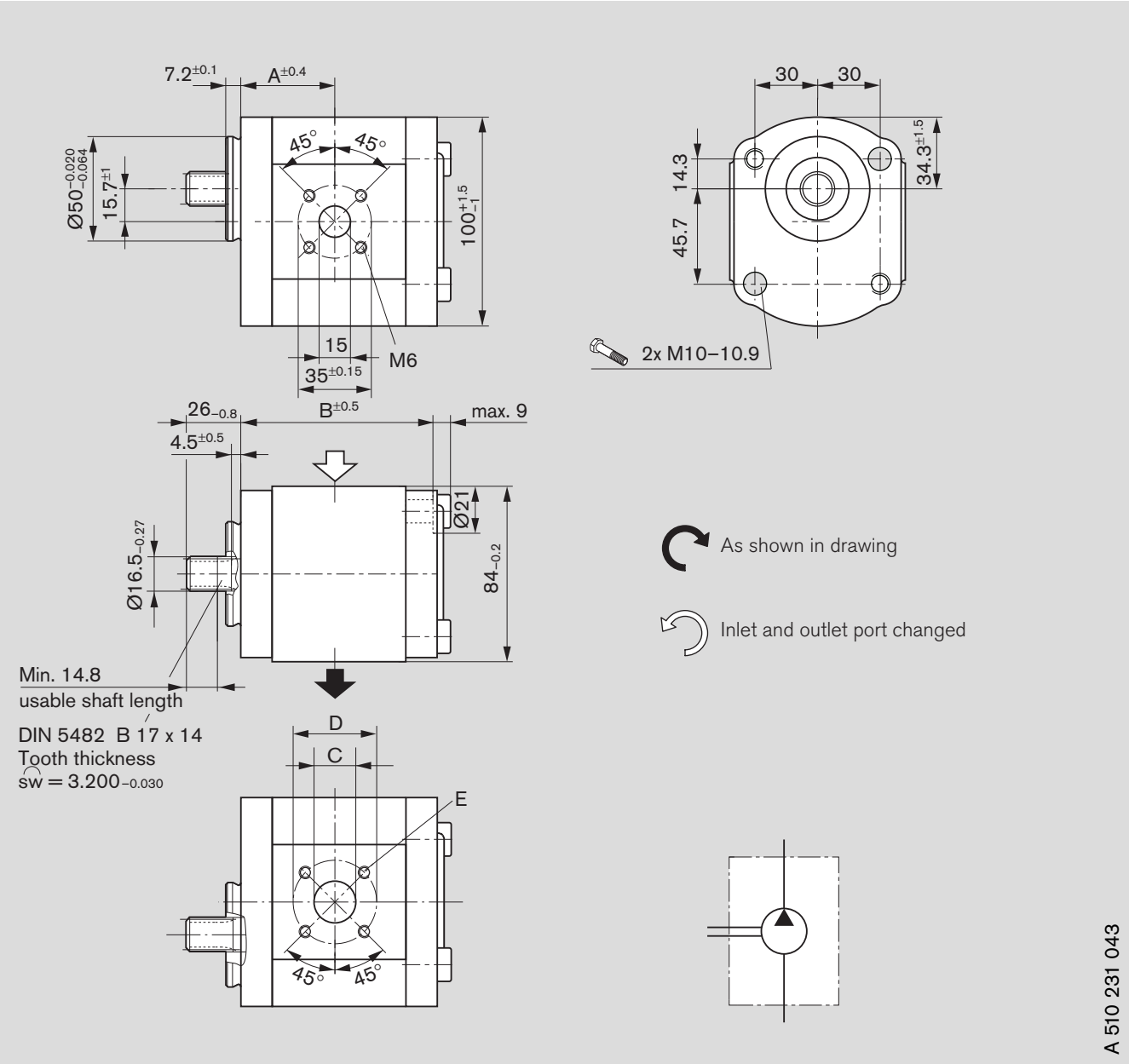

Ordering code

AZPF – 10 – ☐ ☐ ☐ ☐ F N 20 M B

Displacement [cm³/rev]	Ordering-No. L	Ordering-No. R	Max. operating pressure [bar]	Max. rotation speed [rpm]	kg	Dimension [mm] A	B	C	D	E
5.5	–	**0 510 315 007**	280	4000	2.55	38.6	76.2	15	40	M6 depth 13
8	–	–	–	–	–	–	–	–		
11	–	**0 510 515 011**	280	3500	2.85	44.5	85.3	20	40	
14	–	–	–	–	–	–	–	–		
16	–	–	–	–	–	–	–	–		
19	–	**0 510 615 009**	230	3000	3.2	45.0	98.7	20	40	
19	–	–	–	–	–	–	–	–		
22.5	–	–	–	–	–	–	–	–		

Unit dimensions

Standard range

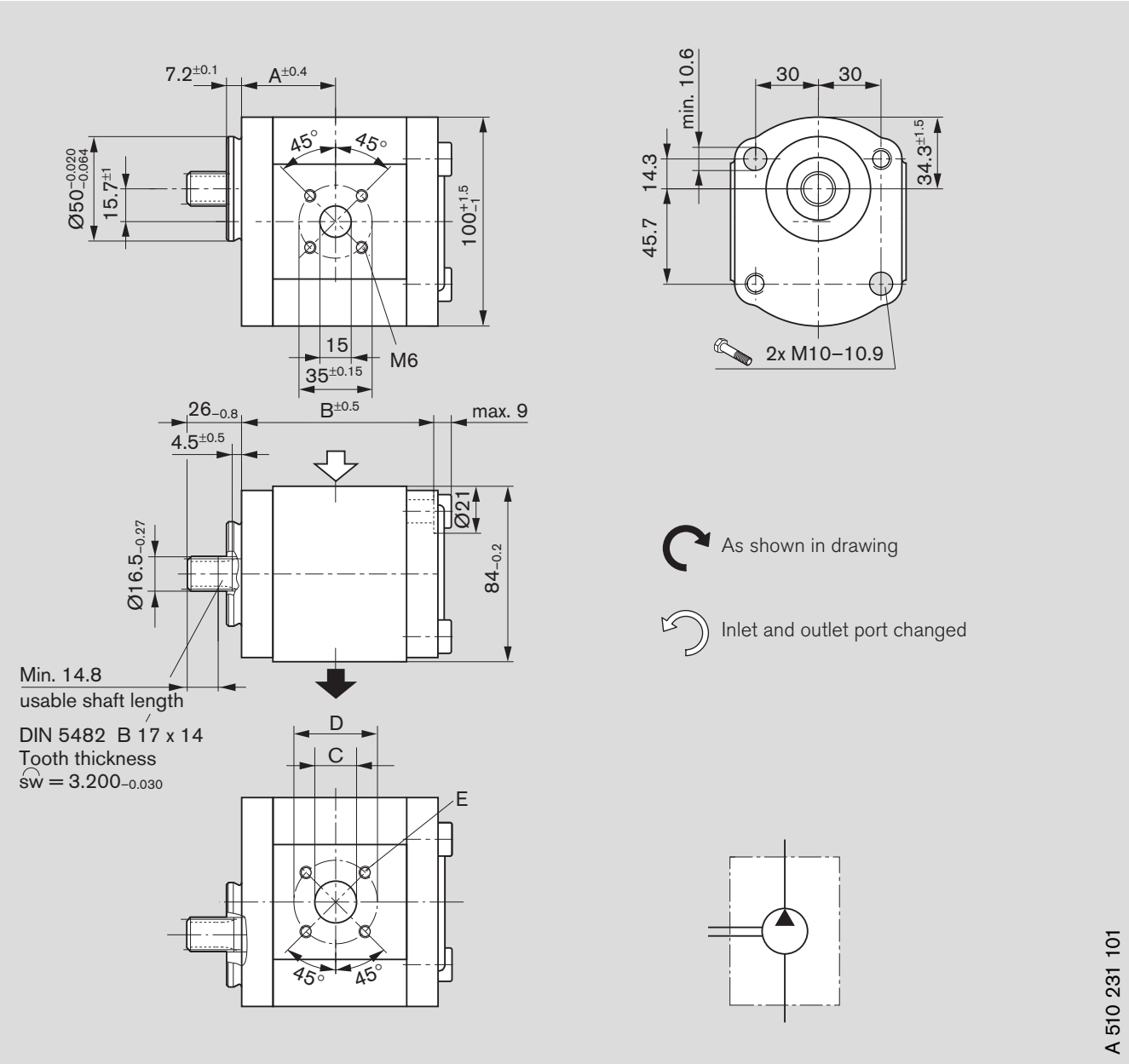

Ordering code

AZPF – 10 – ☐ ☐ ☐ ☐ F P 20 P B
AZPF – 12 – ☐ ☐ ☐ ☐ F P 20 P B*
AZPF – 12 – ☐ ☐ ☐ ☐ F P 20 P B S xxxx**

Displacement [cm³/rev]	Ordering-No. L	Ordering-No. R	Max. operating pressure [bar]	Max. rotation speed [rpm]	kg	Dimension [mm] A	B	C	D	E
5.5	–	–	–	–	–	–	–	–	–	M6 depth 13
8	**0 510 415 328**	–	210	4000	2.7	40.7	80.3	20	15	
11	**0 510 515 337***	**0 510 515 012**	280	3500	2.8	44.5	85.3	20	15	
14	**0 510 515 338**	**0 510 515 013**	210	3000	3.0	45.0	90.3	20	15	
16	–	–	–	–	–	–	–	–	–	
19	–	–	–	–	–	–	–	–	–	
22.5	**0 510 715 320****	**0 510 715 008****	210	3000	3.6	58.6	116.1	20	15	

Unit dimensions

Standard range

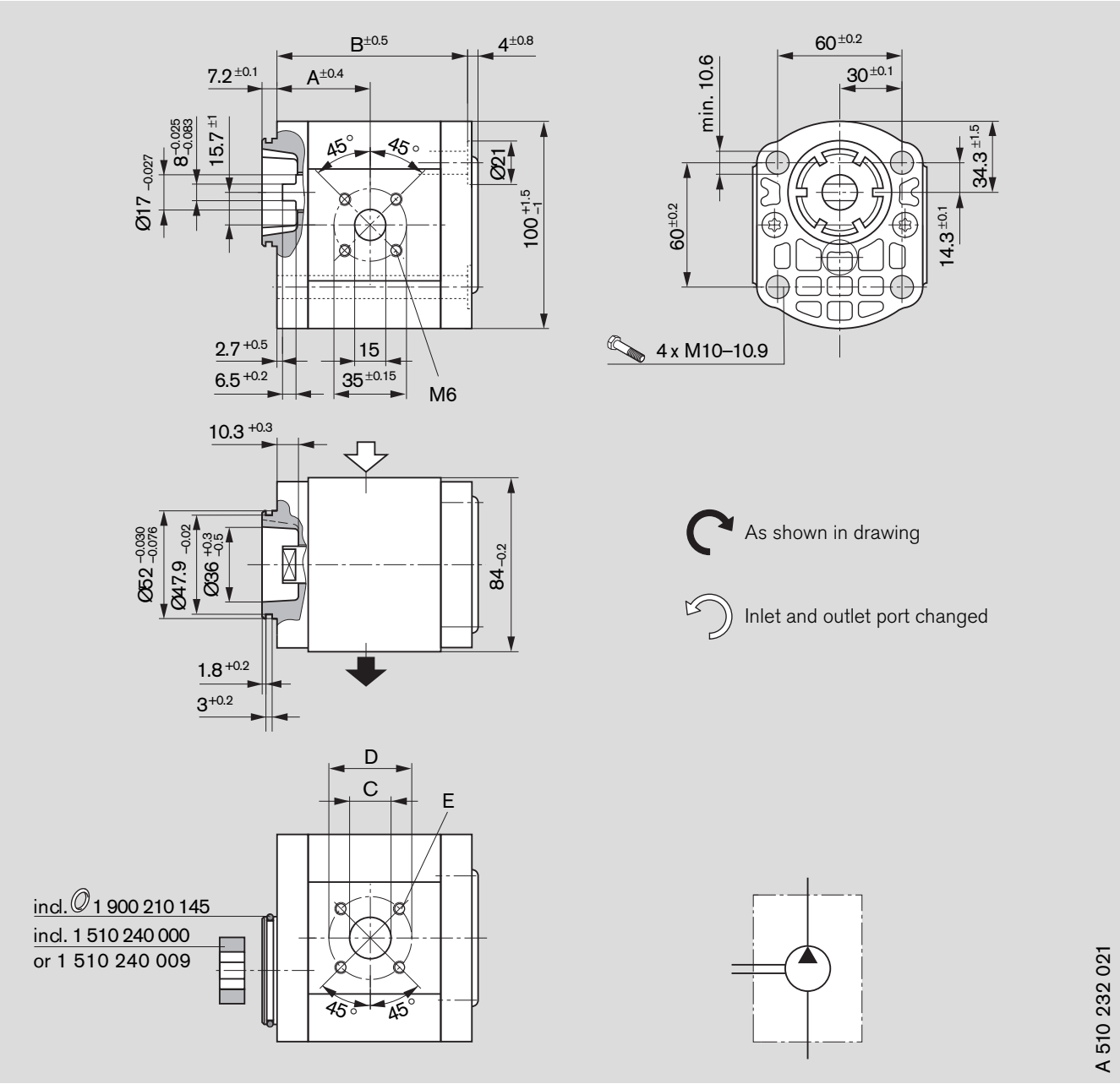

Ordering code

AZPF – XX – ☐ ☐ ☐ ☐ N T 20 M B

Displacement [cm³/rev]	Ordering-No. L	Ordering-No. R	Max. operating pressure [bar]	Max. rotation speed [rpm]	kg	Dimension [mm] A	B	C	D	E
4	**0 510 215 307**	**0 510 215 007**	280	4000	2.5	37.4	73.7	15	40	M6 depth 13
5.5	**0 510 315 305**	**0 510 315 005**	280	4000	2.5	38.6	76.2	15	40	
8	**0 510 415 314**	**0 510 415 006**	280	4000	2.5	40.7	80.3	20	40	
11	**0 510 515 311**	**0 510 515 005**	280	3500	2.6	44.5	85.3	20	40	
14	**0 510 515 340**	**0 510 515 019**	280	3000	2.38	45.0	90.3	20	40	
16	**0 510 615 315**	**0 510 615 007**	230	3000	3.0	45.0	93.7	20	40	
19	**0 510 615 321**	**0 510 615 008**	190	3000	3.0	45.0	98.7	20	40	
22.5	**0 510 715 307**	**0 510 715 004**	160	2500	3.2	52.6	104.1	20	40	

Unit dimensions

Standard range

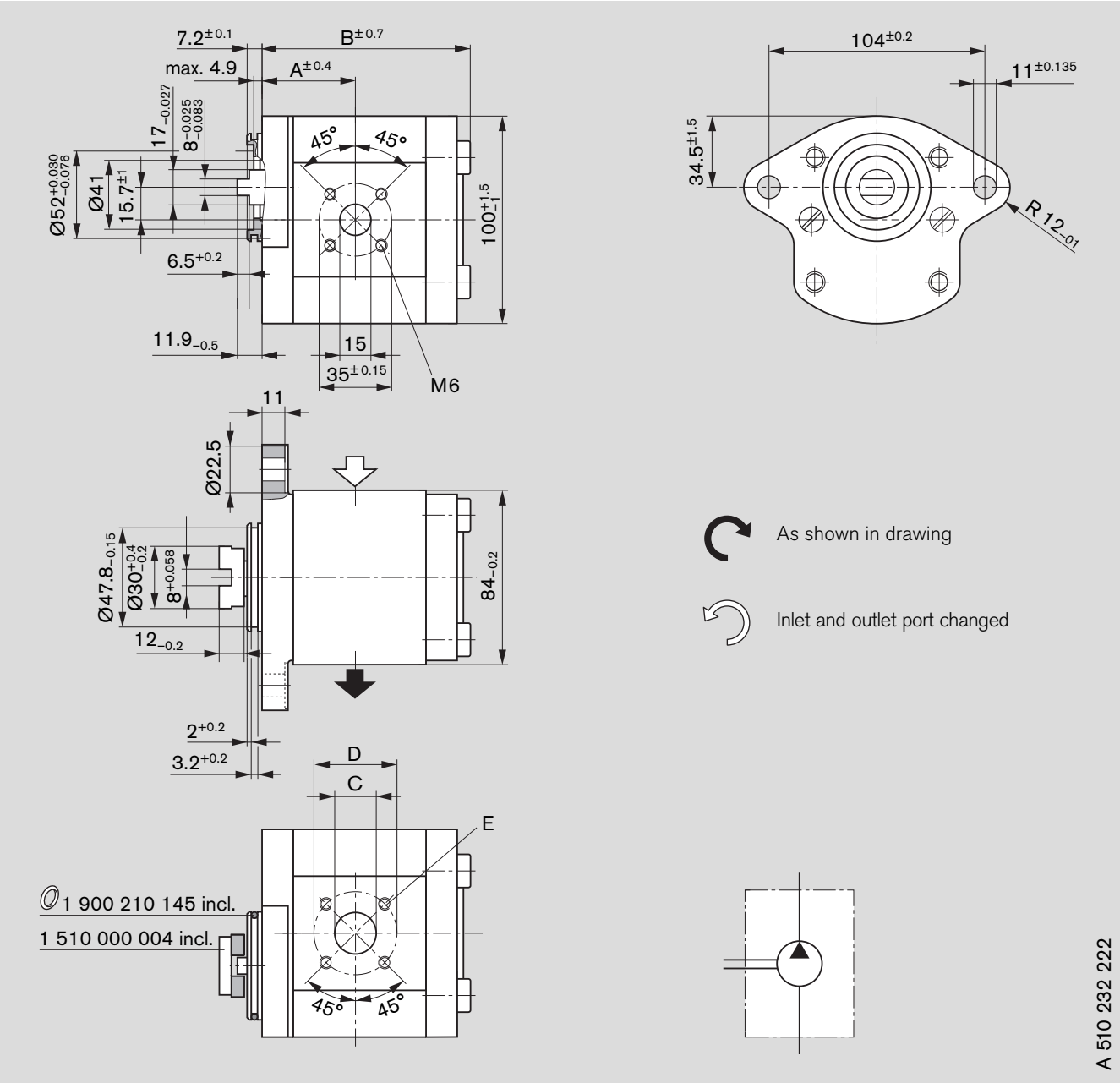

Ordering code

AZPF – 10 – ☐ ☐ ☐ ☐ N L 20 K B

AZPF – 11 – ☐ ☐ ☐ ☐ N L 20 K B*

Displacement [cm³/rev]	Ordering-No. L	Ordering-No. R	Max. operating pressure [bar]	Max. rotation speed [rpm]	kg	Dimension [mm] A	B	C	D	E
4	–	**0 510 225 012**	280	4000	2.8	37.4	81.7	15	40	M6 depth 13
5.5	**0 510 325 312**	**0 510 325 012**	280	4000	2.82	38.6	84.4	15	40	
8	**0 510 425 331***	**0 510 425 019**	280	4000	3.0	40.7	88.5	20	40	
11	–	**0 510 525 025**	280	3500	3.1	44.5	93.3	20	40	
16	**0 510 625 358***	**0 510 625 027***	230	3000	3.3	45.0	101.9	20	40	
19	**0 510 625 368**	**0 510 625 032**	190	3000	3.5	45.0	106.9	20	40	
22.5	–	**0 510 725 044***	160	3000	4.0	58.6	122.5	20	40	

Unit dimensions

Standard range

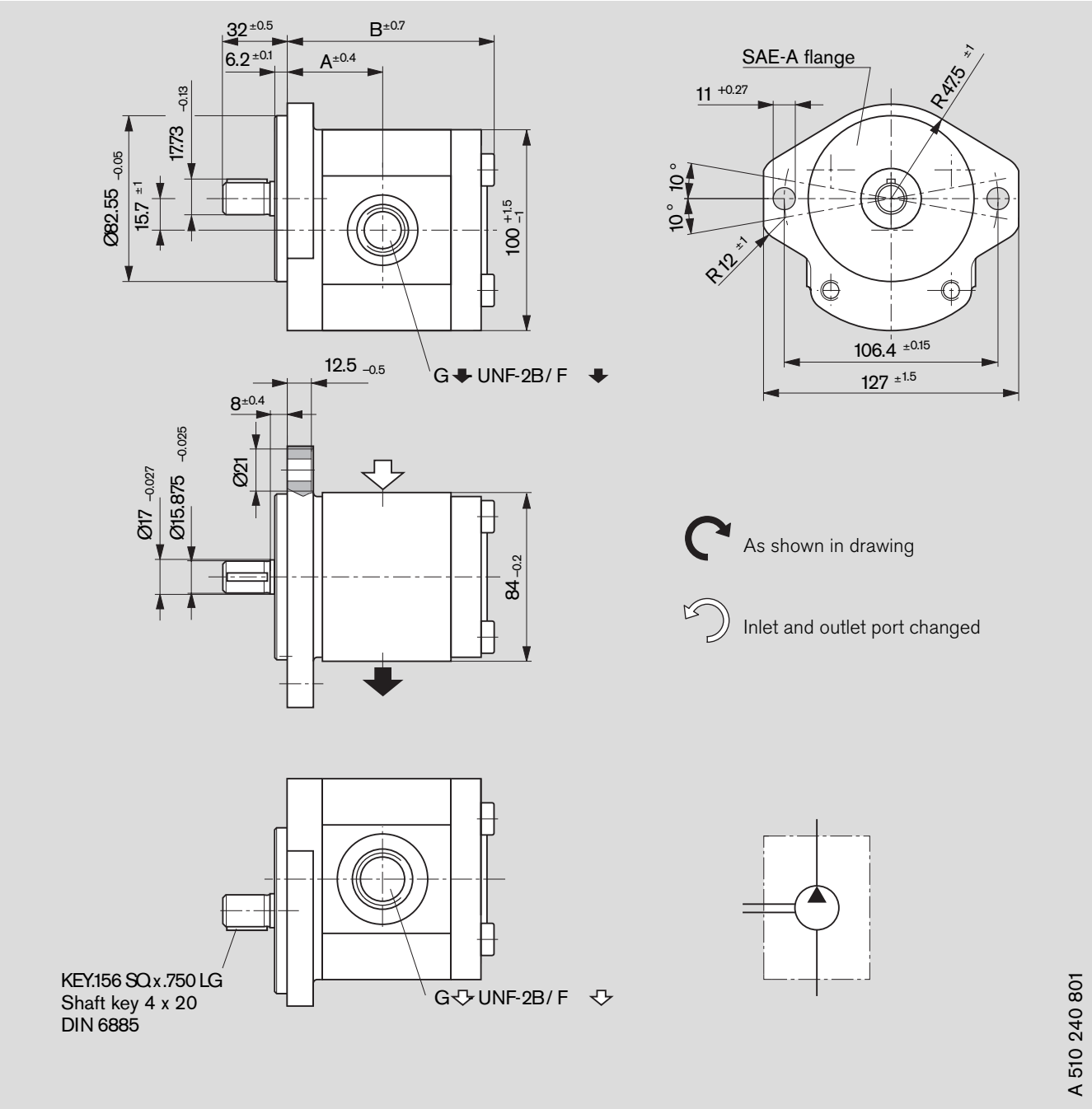

Ordering code

AZPF – 10 – □ □ □ □ Q R 12 M B

Displacement [cm³/rev]	Ordering-No. L	Ordering-No. R	Max. operating pressure [bar]	Max. rotation speed [rpm]	kg	Dimension [mm] A	B	G ⇩	G ⬇	F ⇩	F ⬇
4	–	**0 510 225 011**	260	4000	3.3	39.9	85.0	9/16-18	9/16-18	13	13
5.5	–	**0 510 325 011**	260	4000	3.3	41.1	87.5	9/16-18	9/16-18	13	13
8	–	**0 510 425 016**	260	4000	3.4	43.2	91.6	7/8-14	7/8-14	16	16
11	–	**0 510 525 015**	260	3500	3.6	47.0	96.6	7/8-14	7/8-14	16	16
14	–	**0 510 525 031**	230	3000	3.65	47.5	101.6	11/16-12	7/8-14	19	16
16	–	**0 510 625 021**	200	3000	3.7	47.5	105.0	11/16-12	7/8-14	19	16
19	–	**0 510 625 041**	170	3500	3.9	47.5	110.0	11/16-12	7/8-14	19	16
22.5	–	**0 510 725 059**	140	2500	4.0	55.1	115.4	11/16-12	7/8-14	19	16

Unit dimensions

Standard range

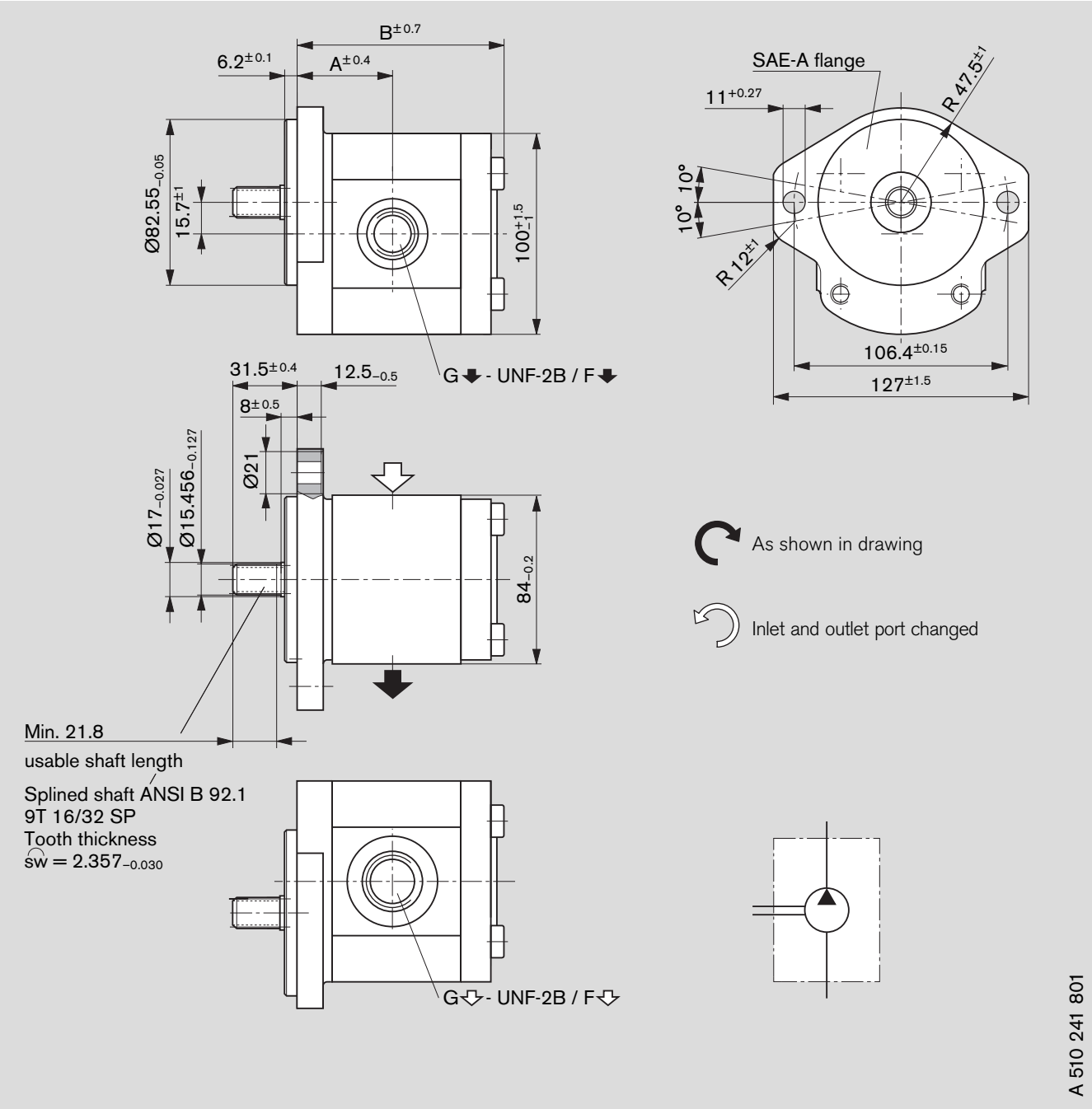

Ordering code

AZPF – 10 – □ □ □ □ R R 12 M B

Dis-place-ment [cm³/rev]	Ordering-No. L	Ordering-No. R	Max. operating pressure [bar]	Max. rotation speed [rpm]	kg	Dimension [mm] A	B	G	G	F	F
4	–	**0 510 225 010**	280	4000	3.15	39.9	82.7	9/16-18	9/16-18	13	13
5.5	–	**0 510 325 010**	280	4000	3.2	41.4	85.2	9/16-18	9/16-18	13	13
8	–	**0 510 425 015**	280	4000	3.3	43.2	91.1	7/8-14	7/8-14	16	16
11	**0 510 525 315**	**0 510 525 014**	280	3500	3.4	47.0	96.1	11/16-12	7/8-14	19	16
14	–	**0 510 525 041**	280	3000	3.5	47.5	101.1	11/16-12	7/8-14	19	16
16	–	**0 510 625 020**	280	3000	3.75	47.5	104.5	11/16-12	7/8-14	19	16
19	**0 510 625 346**	**0 510 625 048**	230	3000	3.9	47.5	109.5	11/16-12	7/8-14	19	16
22.5	–	**0 510 725 063**	210	2500	4.0	55.1	114.9	11/16-12	7/8-14	19	16

Unit dimensions

Standard range

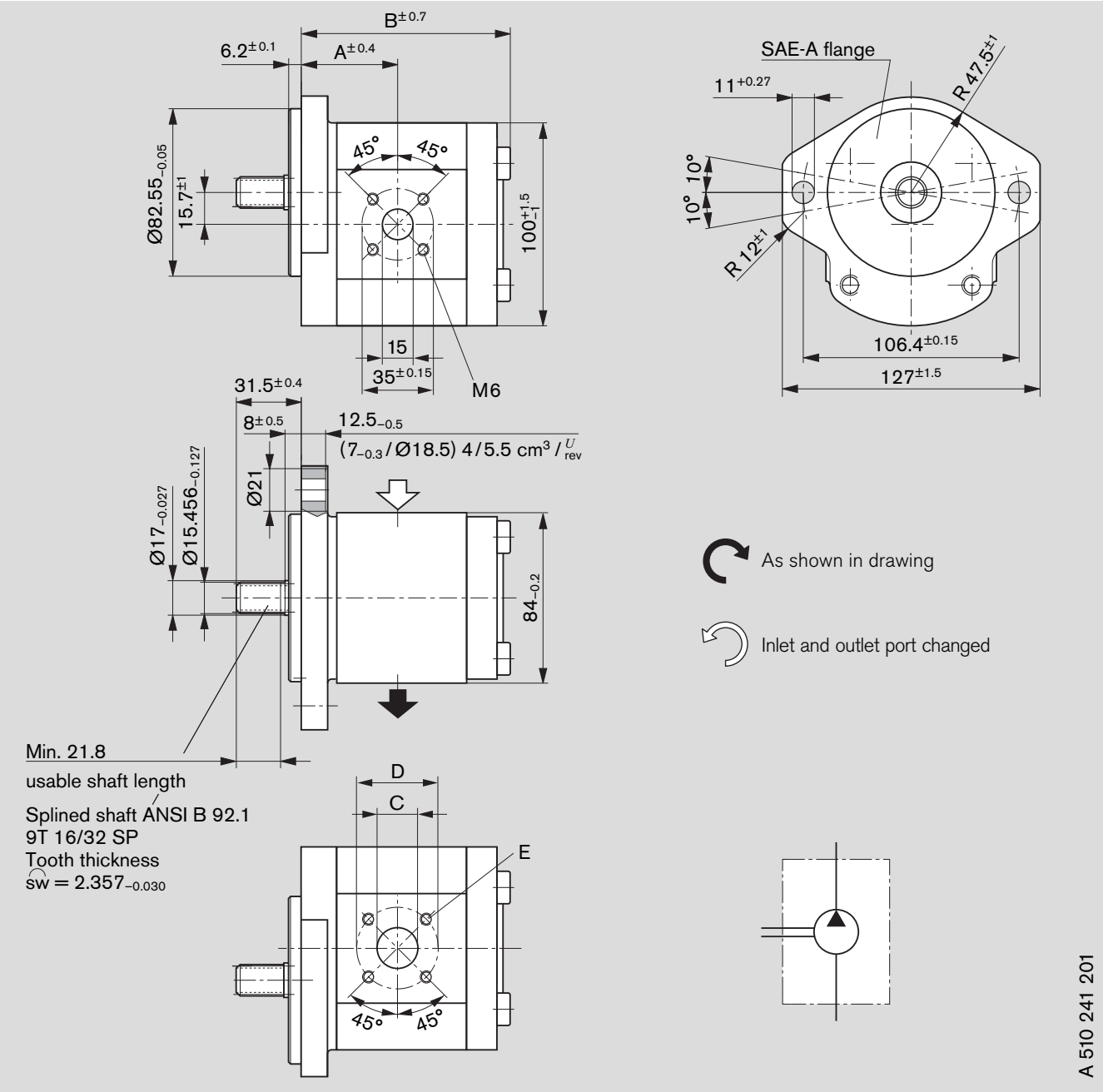

Ordering code

AZPF – 10 – ☐ ☐ ☐ ☐ R R 20 M B

AZPF – 11 – ☐ ☐ ☐ ☐ R R 20 K B*

Displacement [cm³/rev]	Ordering-No. L	Ordering-No. R	Max. operating pressure [bar]	Max. rotation speed [rpm]	kg	Dimension [mm] A	B	C	D	E
4	**0 510 225 314**	**0 510 225 013**	280	4000	3.15	39.9	85.0	15	40	M6 depth 13
5.5	**0 510 325 313**	**0 510 325 013**	280	4000	3.2	41.1	87.5	15	40	
8	**0 510 425 314**	**0 510 425 020**	280	4000	3.3	43.2	91.6	20	40	
11	**0 510 525 324***	**0 510 525 019**	280	3500	3.5	47.0	96.6	20	40	
14	**0 510 525 325**	**0 510 525 020**	280	3000	3.6	47.5	101.6	20	40	
16	**0 510 625 329**	**0 510 625 028**	280	3000	3.8	47.5	105.0	20	40	
19	**0 510 625 330***	**0 510 625 029***	230	3000	3.9	47.5	110.0	20	40	
22.5	**0 510 725 361**	**0 510 725 077***	210	2500	4.1	55.1	115.4	20	40	

Unit dimensions

Standard range

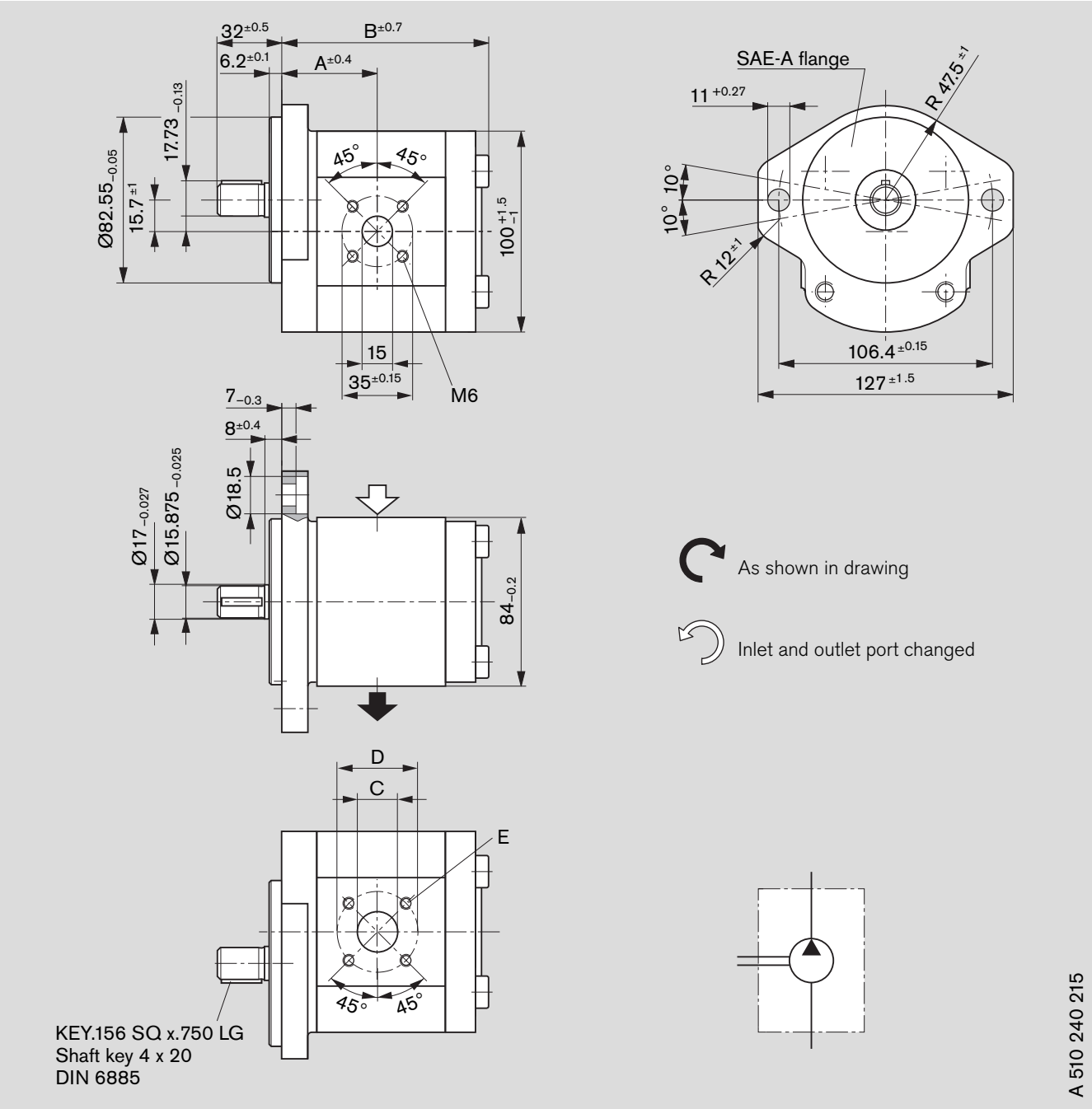

Ordering code

AZPF – 10 – ☐ ☐ ☐ ☐ Q R 20 M B

Displacement [cm³/rev]	Ordering-No. L	Ordering-No. R	Max. operating pressure [bar]	Max. rotation speed [rpm]	kg	Dimension [mm] A	B	C	D	E
4	–	**0 510 225 014**	280	4000	3.2	39.9	84.5	15	40	M6 depth 13
5.5	–	**0 510 325 016**	280	4000	3.3	41.1	87.0	15	40	
8	–	**0 510 425 025**	280	4000	3.3	43.2	91.1	20	40	
11	–	**0 510 525 033**	280	3500	3.5	47.0	96.1	20	40	
16	–	**0 510 625 042**	200	3000	3.8	47.5	104.5	20	40	
19	–	**0 510 625 043**	170	3000	3.9	47.5	109.5	20	40	
22.5	**0 510 725 396**	**0 510 725 060**	140	2500	3.9	55.1	114.9	20	40	

Unit dimensions

Standard range

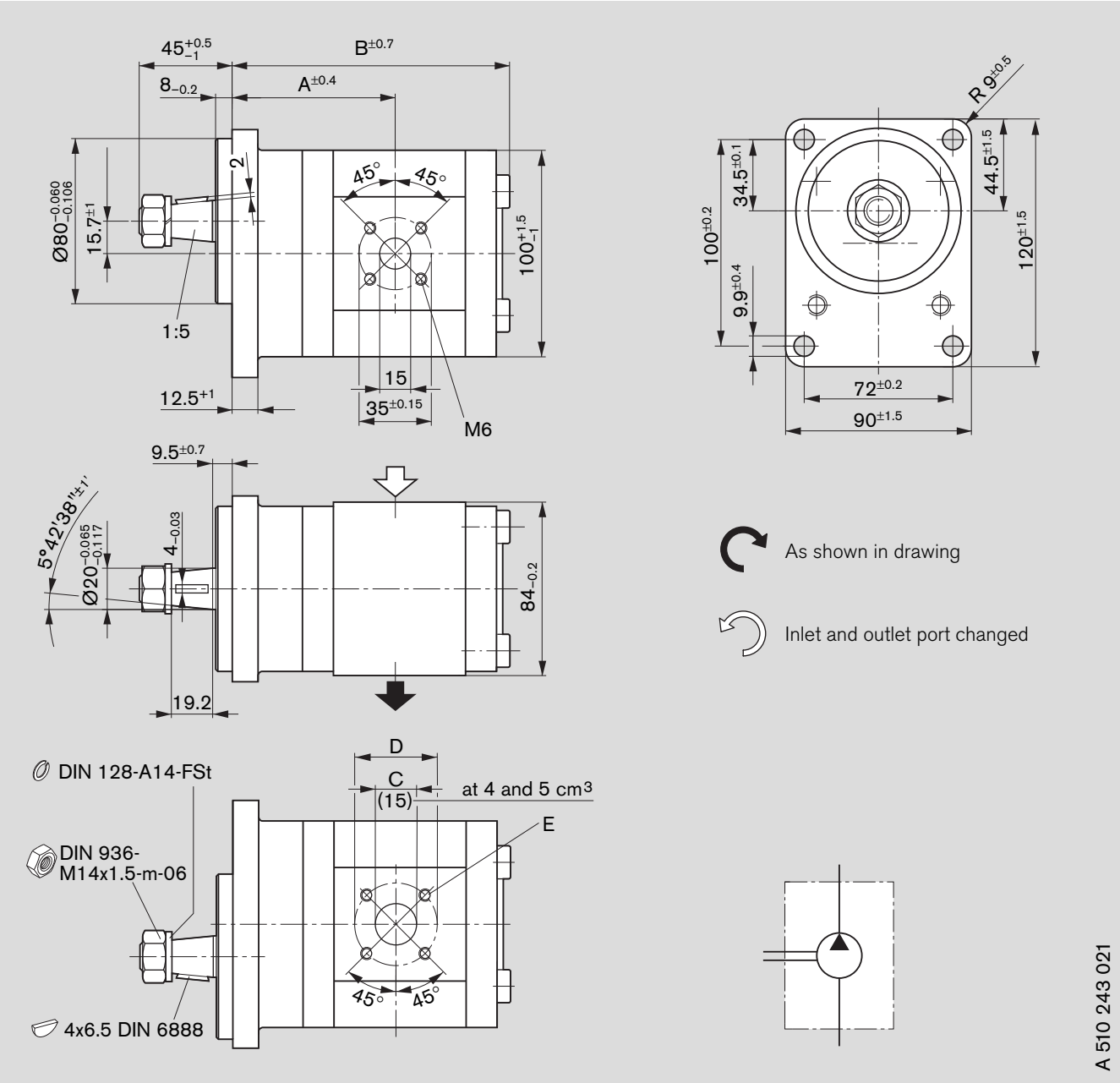

Ordering code

AZPF – 11 – ☐ ☐ ☐ ☐ S A 20 M B

AZPF – 11 – ☐ ☐ ☐ ☐ S A 20 K B*

Displacement [cm³/rev]	Ordering-No. L	Ordering-No. R	Max. operating pressure [bar]	Max. rotation speed [rpm]	kg	Dimension [mm] A	B	C	D	E
4	**0 510 245 300**	**0 510 245 001**	280	4000	3.1	71.1	114.2	15	40	M6 depth 13
5.5	**0 510 345 300**	**0 510 345 001**	280	4000	3.1	72.3	116.7	15	40	
8	**0 510 445 300**	**0 510 445 001***	280	4000	3.3	74.4	120.8	20	40	
11	**0 510 545 300**	**0 510 545 001**	280	3500	3.5	78.2	125.8	20	40	
14			280	3000		78.7	130.8	20	40	
16	**0 510 645 300**	**0 510 645 004**	230	3000	3.6	78.7	134.2	20	40	
19		**0 510 645 002**	190	3000	3.9	78.7	139.2	20	40	
22.5			160	2500		92.3	156.6	20	40	

Unit dimensions

Standard range

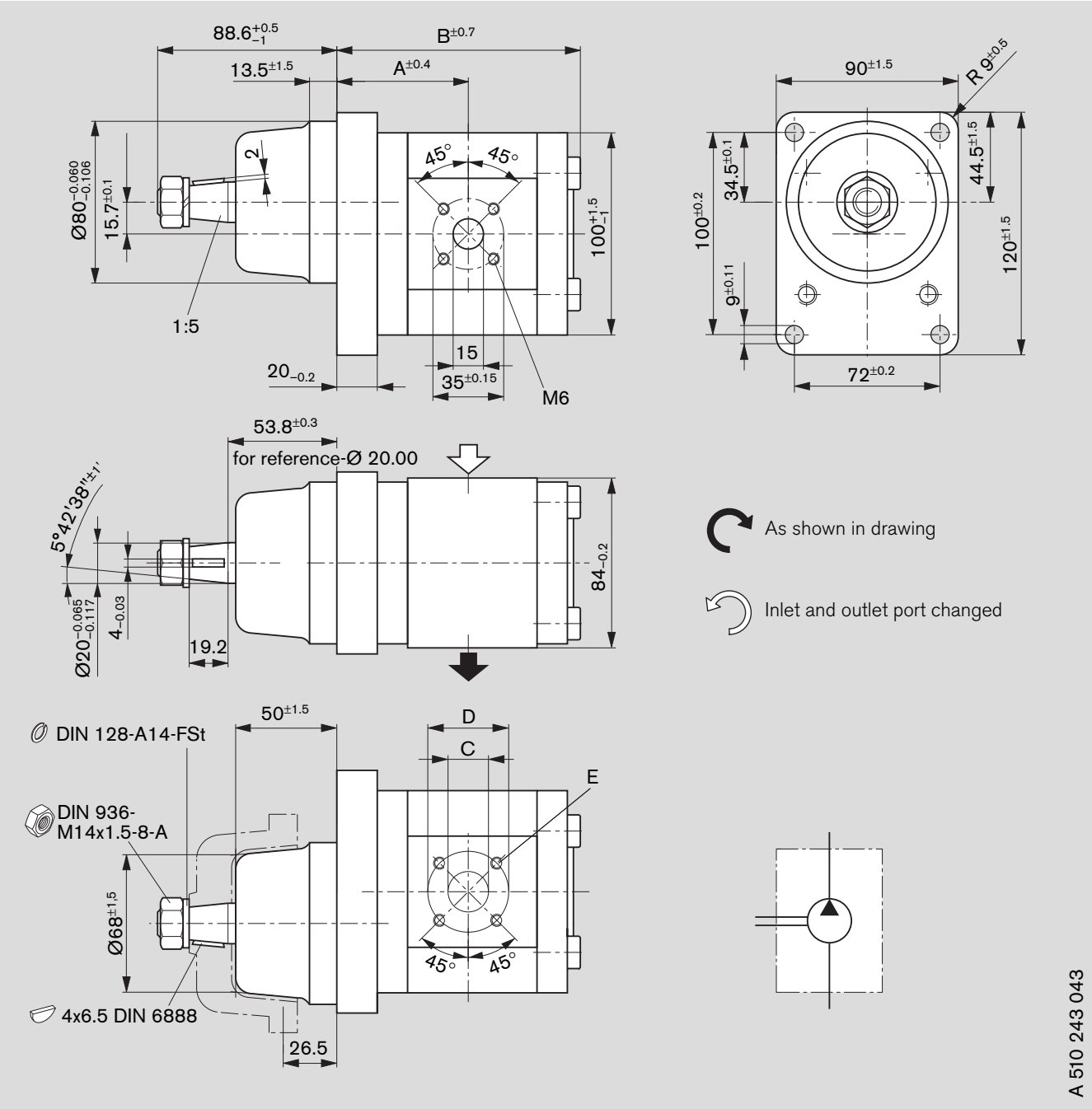

Ordering code

AZPF – 10 – ☐ ☐ ☐ ☐ S G 20 M B

Displacement [cm³/rev]	Ordering-No. L	Ordering-No. R	Max. operating pressure [bar]	Max. rotation speed [rpm]	kg	Dimension [mm] A	B	C	D	E
11	–	**0 510 545 003**	280	3500	3.8	64.5	113.8	20	40	M6 depth 13
14	**0 510 545 302**	**0 510 545 002**	280	3000	4.0	65.0	118.8	20	40	
16	–	**0 510 645 005**	230	3000	4.1	65.0	122.0	20	40	
19	–	**0 510 645 003**	230	3000	4.3	65.0	127.0	20	40	

Unit dimensions

Standard range

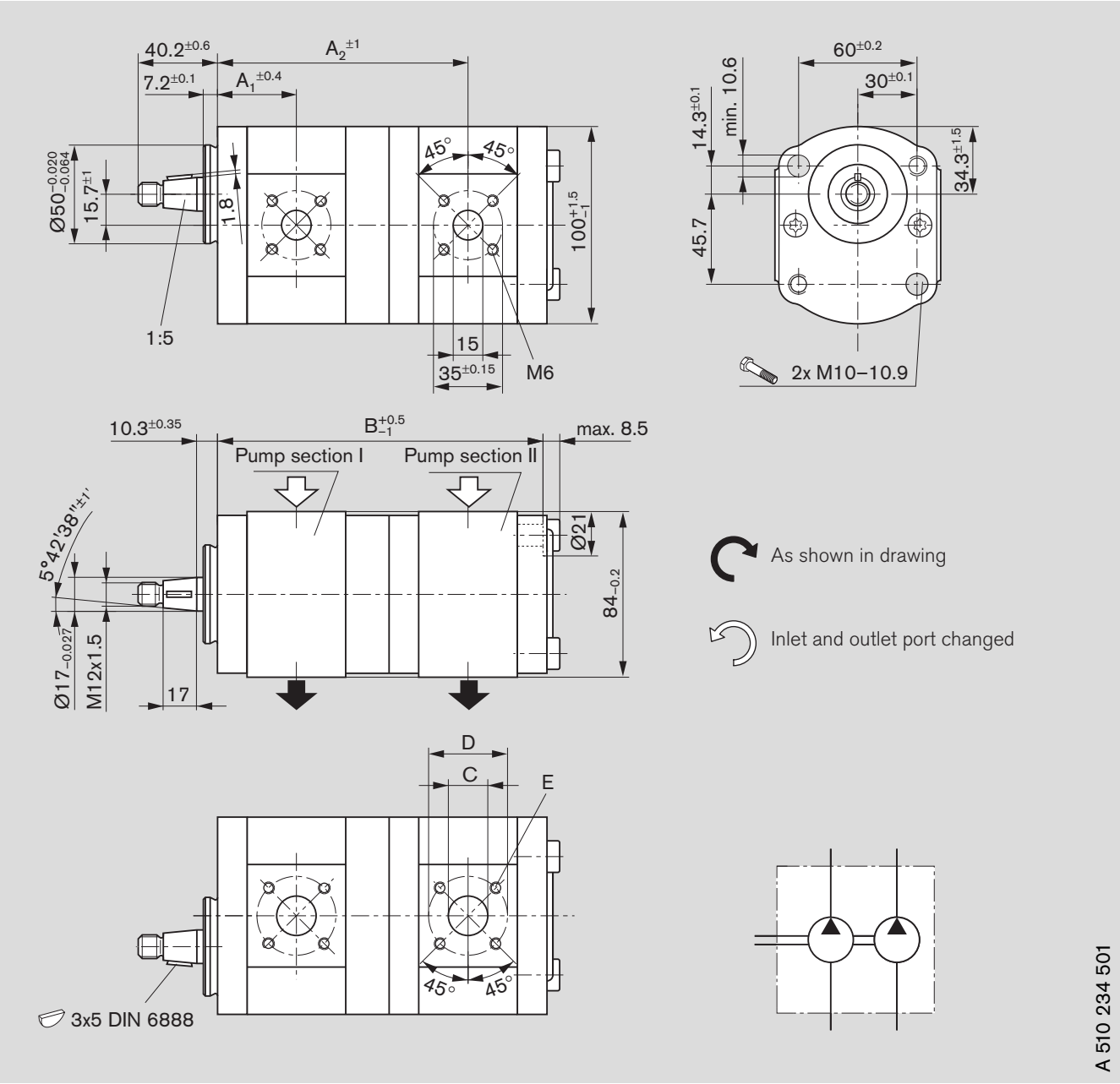

Ordering code
AZPFF – 12 – □□□ / □□□ □ C P 20 20 K B

Displacement [cm³/rev]		Ordering-No.		Max. operating pressure [bar]		Max. rotation speed [rpm]	kg	Dimension [mm]					
P_I	P_{II}	L	R	P_I	P_{II}			A_1	A_2	B	C [1]	D	E
5.5	4	**0 510 365 305**	–	280	280	4000	4.8	38.6	121.6	157.9	15	40	M6 depth 13
8	4	**0 510 465 324**	**0 510 465 011**	280	280	4000	4.4	40.7	125.7	162.0	20	40	
8	5.5	**0 510 465 344**	**0 510 465 032**	280	280	4000	4.4	40.7	126.9	164.5	20	40	
8	8	**0 510 465 320**	**0 510 465 023**	280	280	4000	5.4	40.7	129.0	168.6	20	40	
11	4	**0 510 565 387**	–	280	280	3500	4.5	44.5	130.7	167.0	20	40	
11	5.5	**0 510 565 319**	**0 510 565 095**	280	280	3500	4.5	44.5	131.9	169.5	20	40	
11	8	**0 510 565 389**	**0 510 565 014**	280	280	3500	4.6	44.5	134.0	173.6	20	40	
11	11	**0 510 565 376**	**0 510 565 061**	280	280	3500	4.8	44.5	137.8	178.6	20	40	
14	4	**0 510 565 406**	–	280	280	3000	4.6	45.0	135.7	172.0	20	40	
14	8	**0 510 565 335**	**0 510 565 072**	280	280	3000	4.8	45.0	139.0	178.6	20	40	
14	11	**0 510 565 393**	–	280	280	3000	5.0	45.0	142.8	183.6	20	40	
14	14	–	**0 510 565 417**	280	280	3000	5.0	45.0	143.3	188.6	20	40	
16	4	**0 510 665 348**	–	280	280	3000	4.75	45.0	139.1	175.4	20	40	
16	5.5	**0 510 665 337**	–	280	280	3000	4.8	45.0	140.3	177.9	20	40	
16	8	**0 510 665 328**	**0 510 665 135**	280	280	3000	6.0	45.0	142.4	182.0	20	40	
16	11	**0 510 665 382**	**0 510 665 152**	280	280	3000	5.0	45.0	146.2	187.0	20	40	
16	14	**0 510 665 381**	**0 510 665 144**	280	280	3000	5.1	45.0	146.7	192.0	20	40	
16	16	**0 510 665 330**	**0 510 665 052**	280	230	3000	6.4	45.0	146.7	195.4	20	40	
19	4	**0 510 665 369**	–	230	280	3000	4.9	45.0	144.1	180.4	20	40	
19	5	**0 510 665 442**	–	230	280	3000	4.8	45.0	145.3	183.2	20	40	
19	11	**0 510 665 368**	–	230	280	3000	5.2	45.0	146.2	192.0	20	40	
19	14	**0 510 665 418**	–	230	280	3000	5.0	45.0	151.7	197.0	20	40	
19	19	**0 510 665 336**	–	230	190	3000	6.6	45.0	151.7	205.4	20	40	
22	8	**0 510 765 345**	**0 510 765 045**	210	280	2500	5.1	52.6	152.8	192.4	20	40	
22	11	**0 510 765 309**	**0 510 765 049**	210	280	2500	5.2	52.6	156.7	197.7	20	40	
22	16	**0 510 765 343**	**0 510 765 028**	210	230	2500	5.5	52.6	157.1	205.8	20	40	

[1]) 4 and 5.5 cm³ Ø 15

Unit dimensions

Standard range

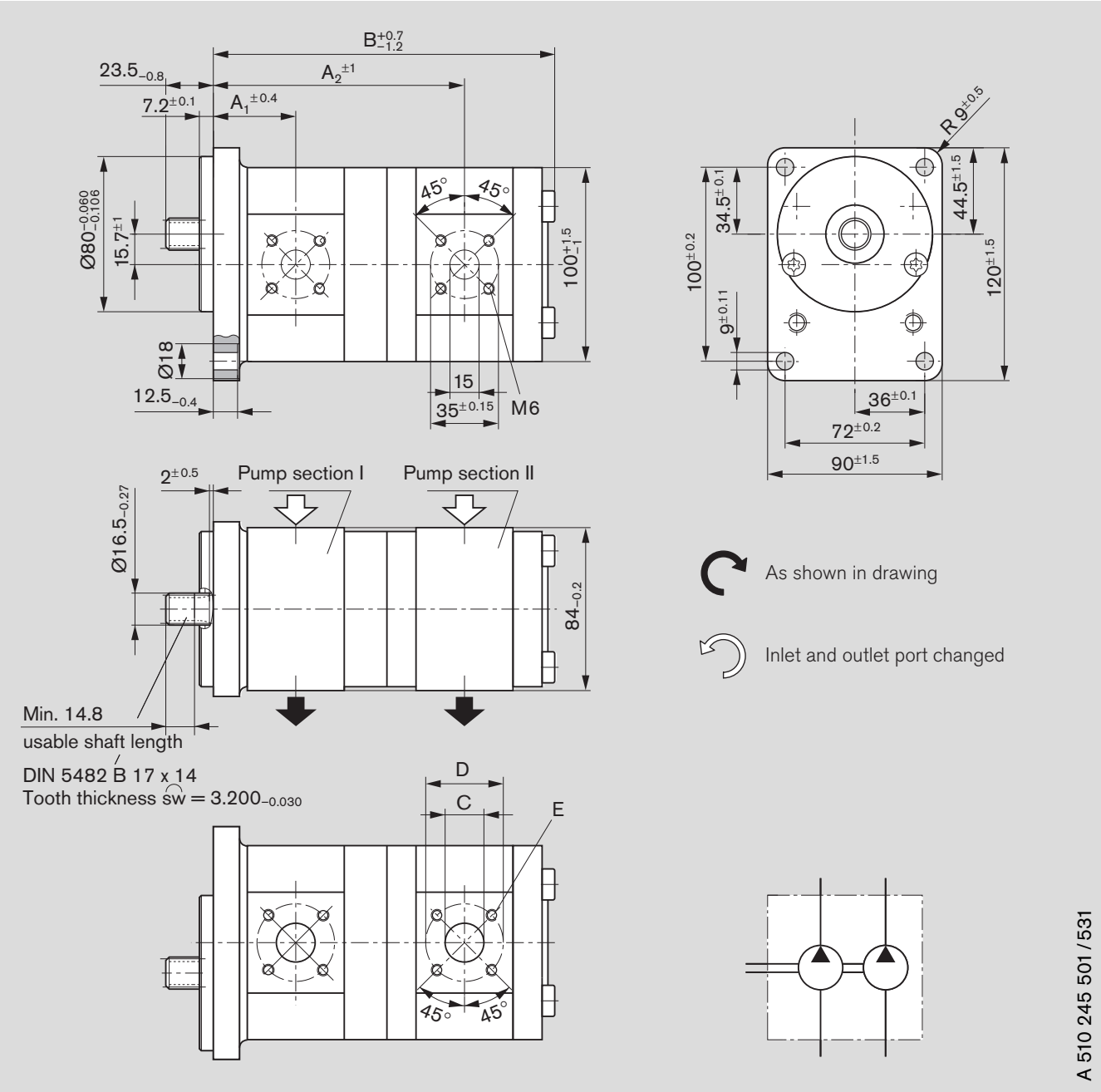

Ordering code

AZPFF – 10 – ☐☐☐ / ☐☐☐ ☐ F B 20 20 M B

AZPFF – 11 – ☐☐☐ / ☐☐☐ ☐ F B 20 20 M B*

Displacement [cm³/rev]		Ordering-No.		Max. operating pressure [bar]		Max. rotation speed [rpm]	kg	Dimension [mm]					
P_I	P_{II}	L	R	P_I	P_{II}			A_1	A_2	B	C[1]	D	E
8	5.5	**0 510 465 345**	–	280	280	4000	5.1	43.2	129.4	174.0	20	40	M 6 depth 13
8	8	**0 510 465 326***	–	280	280	4000	5.1	43.2	131.5	178.1	20	40	
11	4	–	**0 510 565 032**	280	280	3500	6.3	47.0	133.2	176.5	20	40	
11	5.5	**0 510 565 332**	**0 510 565 034**	280	280	3500	6.35	47.0	134.4	179.0	20	40	
11	8	**0 510 565 334***	**0 510 565 018**	280	280	3500	6.4	47.0	136.5	183.1	20	40	
11	11	**0 510 565 328**	**0 510 565 035**	280	280	3500	6.5	47.0	140.3	188.1	20	40	
14	4	**0 510 565 367**	–	280	280	3000	6.4	47.5	138.2	181.5	20	40	
14	5.5	**0 510 565 069**	–	280	280	3500	6.5	47.5	139.4	183.7	20	40	
14	8	**0 510 565 356**	**0 510 565 019**	280	280	3000	6.5	47.5	141.5	188.1	20	40	
16	4	–	**0 510 665 058**	280	280	3000	6.7	47.5	141.6	184.9	20	40	
16	8	**0 510 665 333**	**0 510 665 064**	280	280	3000	6.8	47.5	144.9	191.5	20	40	
16	11	**0 510 665 347**	**0 510 665 036**	280	280	3000	6.9	47.5	148.7	196.5	20	40	
16	16	**0 510 665 334**	**0 510 665 029**	280	230	3000	7.3	47.5	149.2	204.9	20	40	
19	4	–	**0 510 665 115**	230	280	3000	5.5	47.5	146.6	189.0	20	40	
19	11	**0 510 665 375***	–	230	280	3000	5.9	47.5	153.7	201.5	20	40	
19	19	**0 510 665 420**	**0 510 665 097**	230	190	3000	6.3	47.5	154.2	214.9	20	40	
22.5	5.5	**0 510 765 317**	**0 510 765 022**	210	280	2500	5.8	61.1	165.2	209.8	20	40	
22.5	8	**0 510 765 331**	–	210	280	2500	6.18	61.1	167.3	213.9	20	40	
22.5	16	**0 510 765 341**	–	210	230	2500	6.4	61.1	171.6	227.3	20	40	
22.5	22.5	**0 510 765 338**	–	210	160	2500	7.05	61.1	185.2	249.7	20	40	

[1]) 4 and 5.5 cm³ Ø 15

Unit dimensions

Standard range

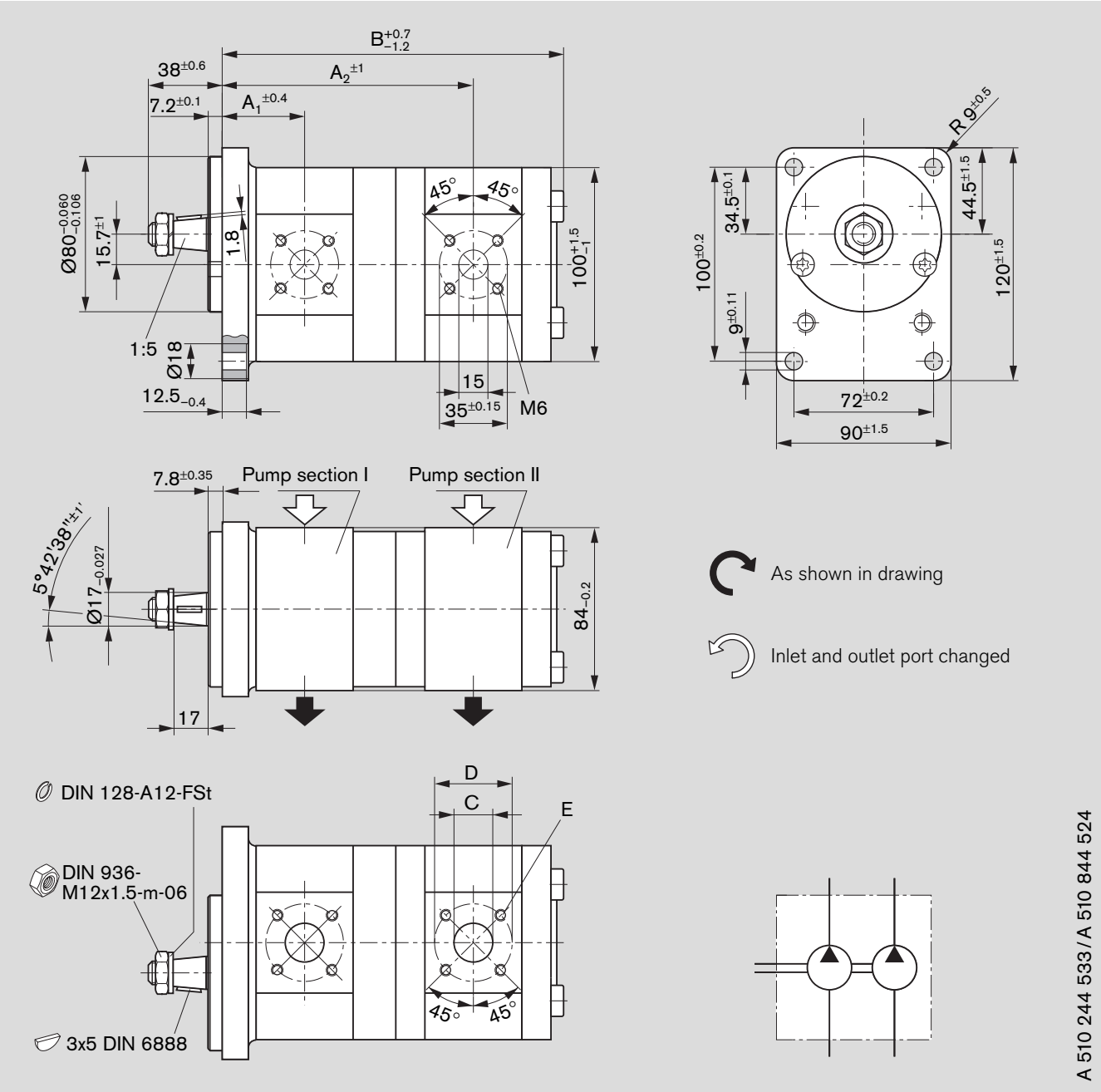

Ordering code
AZPFF – 10 – □□□ / □□□ □ C B 20 20 M B
AZPFF – 11 – □□□ / □□□ □ C B 20 20 M B*

Displacement [cm³/rev]		Ordering-No.		Max. operating pressure [bar]		Max. rotation speed [rpm]	kg	Dimension [mm]					
P_I	P_{II}	L	R	P_I	P_{II}			A_1	A_2	B	C[1]	D	E
4	4	**0 510 900 002***	**0 510 900 001***	280	280	4000	4.5	39.9	121.6	164.4	15	40	M6 depth 13
5.5	4	**0 510 900 005***	**–**	280	280	4000	4.9	41.1	124.1	166.9	15	40	
5.5	5.5	**0 510 900 004***	**0 510 900 003***	280	280	4000	5.0	41.1	125.3	169.4	15	40	
8	16	**–**	**0 510 900 042***	280	230	3000	5.6	43.2	135.8	191.0	20	40	
8	4	**0 510 900 008***	**0 510 900 051***	280	280	4000	5.1	43.2	128.2	171.0	20	40	
8	5.5	**0 510 900 009***	**0 510 900 007***	280	280	4000	5.1	43.2	129.4	173.5	20	40	
8	8	**0 510 900 010***	**0 510 900 006***	280	280	4000	5.2	43.2	131.5	177.6	20	40	
11	4	**0 510 900 015***	**0 510 900 012***	280	280	3500	5.2	47.0	133.2	176.0	20	40	
11	5.5	**0 510 900 017***	**0 510 900 046***	280	280	3500	5.2	47.0	134.4	178.5	20	40	
11	8	**0 510 900 016***	**0 510 900 044***	280	280	3500	5.4	47.0	136.5	182.6	20	40	
11	11	**0 510 900 018***	**0 510 900 039***	280	280	3500	5.5	47.0	140.3	187.6	20	40	
14	4	**0 510 900 036***	**–**	280	280	3000	5.3	47.5	138.2	181	20	40	
14	5.5	**–**	**0 510 900 060***	280	280	3000	5.4	47.5	139.4	183.5	20	40	
14	8	**0 510 900 020***	**0 510 900 011***	280	280	3000	5.5	47.5	141.5	187.6	20	40	
14	8	**0 510 565 364**	**0 510 565 012**	280	280	3000	5.6	47.5	141.5	188.1	20	40	
14	11	**0 510 900 019***	**0 510 900 013***	280	280	3000	5.6	47.5	145.3	192.6	20	40	
14	11	**0 510 565 353**	**0 510 565 033**	280	280	3000	5.7	47.5	145.3	193.1	20	40	
14	14	**–**	**0 510 900 014***	280	280	3000	5.8	47.5	145.8	197.6	20	40	
14	14	**–**	**0 510 565 037**	280	280	3000	5.9	47.5	145.8	198.1	20	40	
16	4	**0 510 900 059***	**0 510 900 021***	280	280	3000	5.5	47.5	141.6	184.4	20	40	
16	5.5	**0 510 900 028***	**–**	280	280	3000	5.5	47.5	142.8	186.9	20	40	
16	8	**0 510 900 035***	**0 510 900 022***	280	280	3000	5.6	47.5	144.9	191.0	20	40	
16	11	**0 510 900 029***	**0 510 900 023***	280	280	3000	5.7	47.5	148.7	196.0	20	40	
16	14	**–**	**0 510 900 061***	280	280	3000	5.9	47.5	149.2	201.0	20	40	
16	16	**0 510 900 030***	**0 510 900 024***	280	230	3000	6.0	47.5	149.2	204.4	20	40	
19	4	**0 510 900 043***	**0 510 900 049***	230	280	3000	5.6	47.5	146.6	189.4	20	40	
19	5.5	**–**	**0 510 665 067**	230	280	3000	5.6	47.5	147.8	192.4	20	40	
19	5.5	**–**	**0 510 900 027***	230	280	3000	5.6	47.5	147.8	191.9	20	40	
19	8	**0 510 900 031***	**0 510 900 047***	230	280	3000	5.8	47.5	149.9	196.0	20	40	
19	8	**0 510 665 325***	**0 510 665 024**	230	280	3000	6.7	47.5	149.9	196.5	20	40	
19	11	**0 510 900 032***	**0 510 900 052***	230	280	3000	5.9	47.5	153.7	201.0	20	40	
19	11	**0 510 665 326**	**–**	230	280	3000	6.9	47.5	153.9	201.5	20	40	
19	14	**0 510 900 053***	**–**	230	280	3000	6.0	47.5	154.2	206.0	20	40	
19	16	**0 510 665 327**	**0 510 665 053**	230	230	3000	7.1	47.5	154.2	209.9	20	40	
19	16	**0 510 900 033***	**0 510 900 026***	230	230	3000	6.1	47.5	154.2	209.4	20	40	
19	19	**0 510 900 034***	**0 510 900 025***	230	210	3000	6.2	47.5	154.2	214.4	20	40	
19	19	**0 510 665 400**	**0 510 665 025**	230	190	3000	6.2	47.5	154.2	214.9	20	40	
22.5	4	**–**	**0 510 900 050***	210	280	2500	5.8	55.1	152.0	194.8	20	40	
22.5	5.5	**0 510 900 055***	**0 510 900 045***	210	280	2500	5.8	55.1	153.2	197.3	20	40	
22.5	8	**0 510 900 057***	**0 510 900 040***	210	280	2500	5.9	55.1	155.3	201.4	20	40	
22.5	8	**–**	**0 510 765 023**	230	280	3000	5.9	61.0	167.3	213.9	20	40	
22.5	11	**–**	**0 510 900 054***	210	280	2500	6.0	55.1	159.1	206.4	20	40	
22.5	11	**0 510 765 320**	**–**	210	250	3000	6.3	61.0	171.1	218.9	20	40	
22.5	14	**0 510 900 048***	**0 510 900 058***	210	280	2500	6.2	55.1	159.6	211.4	20	40	
22.5	16	**0 510 900 041***	**0 510 900 037***	210	230	2500	6.2	55.1	159.6	214.8	20	40	
22.5	16	**0 510 765 340**	**–**	210	230	3000	6.55	61.0	171.6	227.3	20	40	
22.5	22.5	**0 510 900 056***	**0 510 900 038***	210	180	2500	6.5	55.1	167.2	225.2	20	40	
22.5	22.5	**–**	**0 510 765 012**	210	160	3000	6.5	61.0	185.2	249.7	20	40	

[1]) 4 and 5.5 cm³ Ø 15

Unit dimensions

Standard range

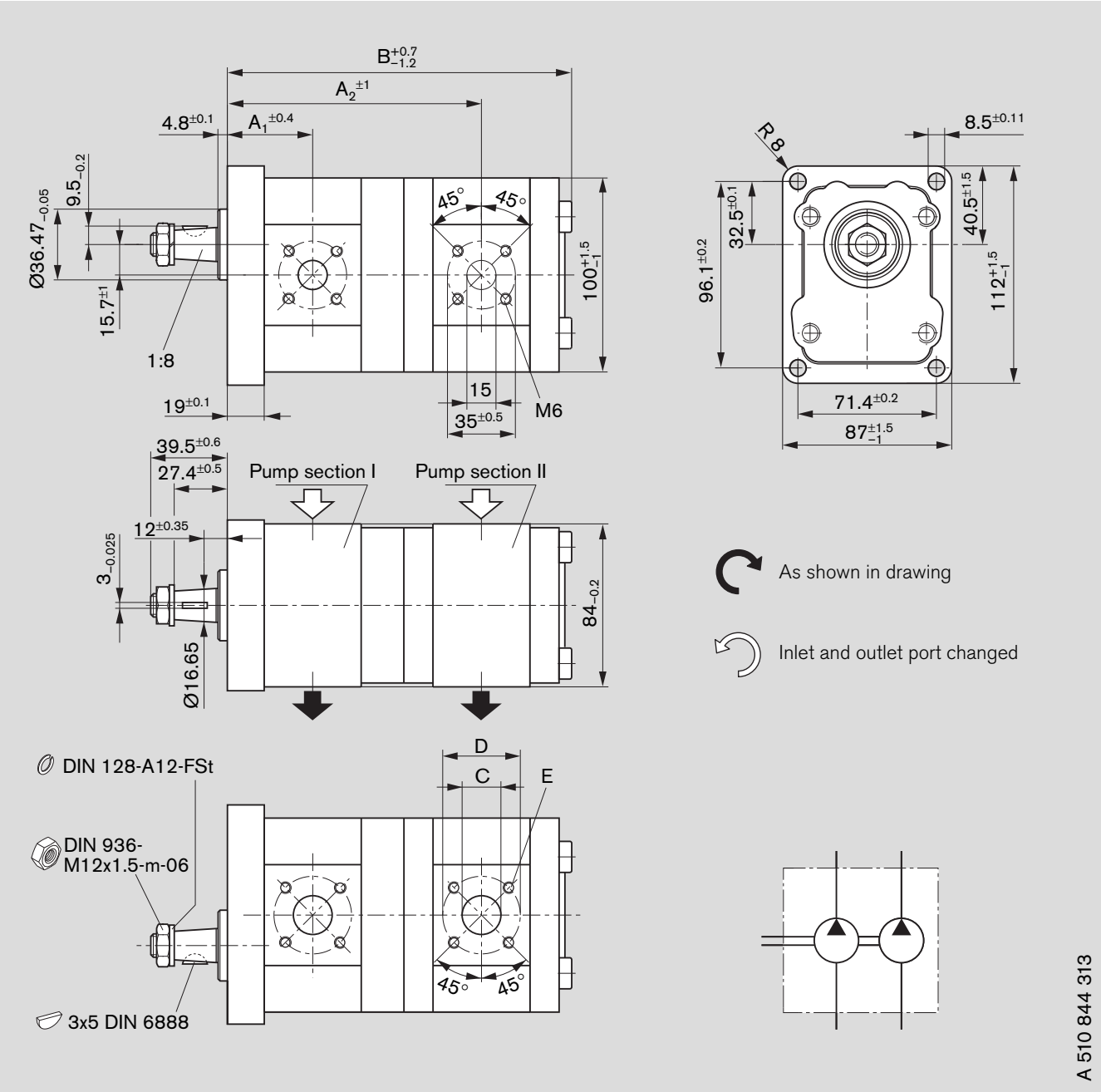

Ordering code
AZPFF – 10 – ☐☐☐ / ☐☐☐ ☐ H O 20 20 M B
AZPFF – 10 – ☐☐☐ / ☐☐☐ ☐ H O 20 20 K B*

Displacement [cm³/rev]		Ordering-No.		Max. operating pressure [bar]		Max. rotation speed [rpm]	kg	Dimension [mm]					
P_I	P_{II}	L	R	P_I	P_{II}			A_1	A_2	B	C[1]	D	E
4	4	–	**0 510 901 500**	280	280	4000	4.7	41.4	123.1	165.9	15	40	M 6 depth 13
8	5.5	**0 510 901 512**		280	280	4000	4.9	44.7	130.9	175.0	20	40	
8	8	–	**0 510 901 504**	280	280	4000	5.0	44.7	133.0	179.1	20	40	
11	4	–	**0 510 901 509**	280	280	3500	5.0	48.5	134.7	177.5	20	40	
11	5.5	**0 510 565 436***	**0 510 901 503**	280	280	3500	5.1	48.5	135.9	180.0	20	40	
14	5.5	**0 510 565 435***	–	280	280	3000	5.2	49.0	140.9	185.0	20	40	
14	11	–	**0 510 901 513**	280	280	3000	5.5	49.0	146.8	194.1	20	40	
16	5.5	–	**0 510 901 510**	280	280	3000	5.3	49.0	144.3	188.4	20	40	
16	8	**0 510 901 514**	–	280	280	3000	5.4	49.0	146.4	192.5	20	40	
16	14	–	**0 510 901 515**	280	280	3000	5.7	49.0	150.7	202.5	20	40	
16	16	–	**0 510 901 501**	280	230	3000	5.8	49.0	150.7	205.9	20	40	
19	8	–	**0 510 901 507**	230	280	3000	5.5	49.0	151.4	197.5	20	40	
19	11	–	**0 510 901 508**	230	280	3000	5.6	49.0	155.2	202.5	20	40	
19	16	–	**0 510 901 502**	230	230	3000	5.9	49.0	155.7	210.9	20	40	
19	19	**0 510 901 506**	–	230	190	3000	6.0	49.0	155.7	215.9	20	40	
22.5	16	**0 510 901 511**	–	210	230	2500	6.1	56.6	161.1	216.3	20	40	
22.5	19	–	**0 510 901 505**	210	190	2500	6.2	56.6	161.7	220.3	20	40	

[1]) 4 and 5.5 cm³ Ø 15

Unit dimensions

Standard range

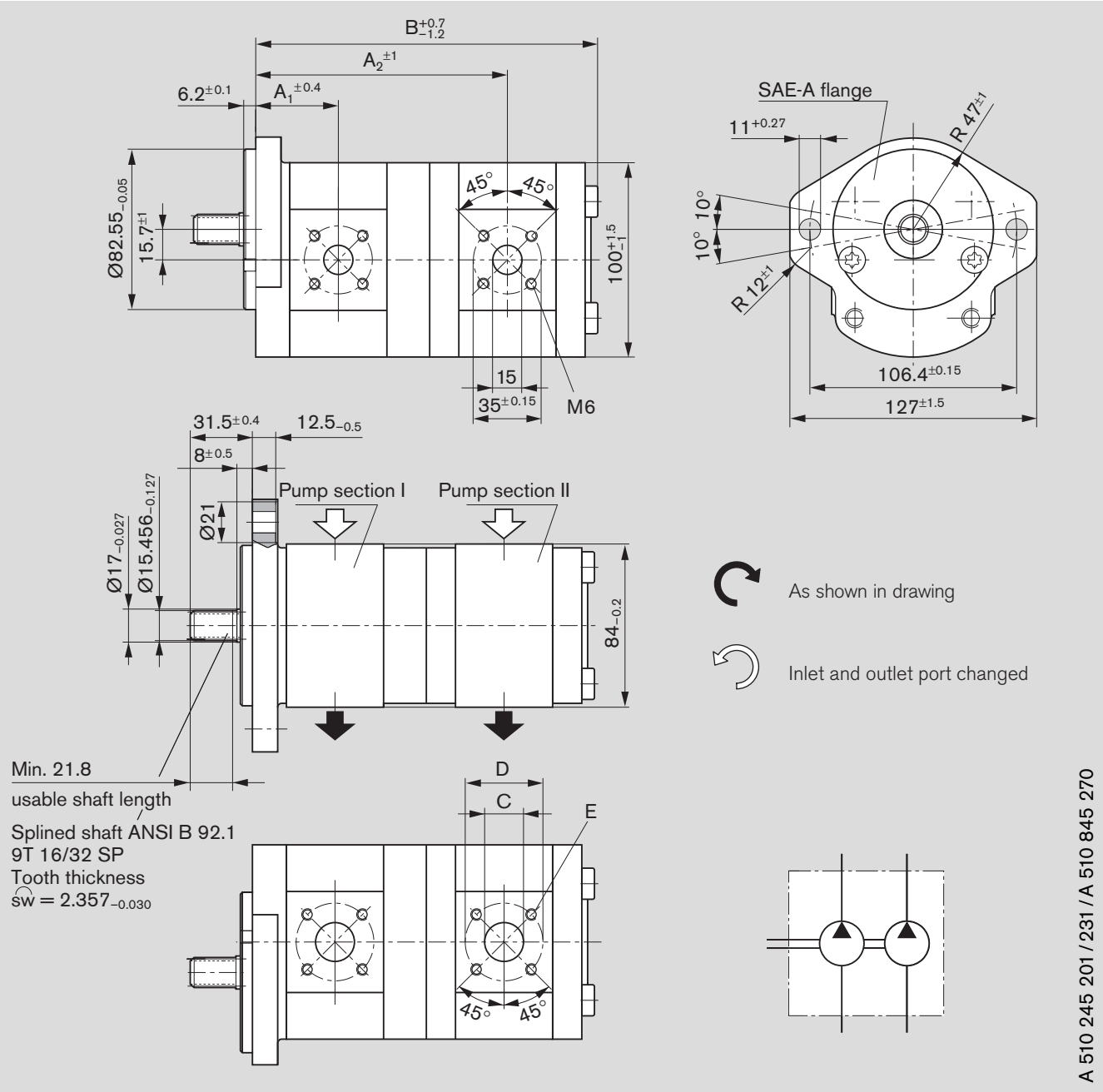

Ordering code

AZPFF – 10 – ☐☐☐ / ☐☐☐ ☐ R R 20 20 M B
AZPFF – 11 – ☐☐☐ / ☐☐☐ ☐ R R 20 20 M B*
AZPFF – 11 – ☐☐☐ / ☐☐☐ ☐ R R 20 20 K B**

Displacement [cm³/rev]		Ordering-No.		Max. operating pressure [bar]		Max. rotation speed [rpm]	kg	Dimension [mm]					
P_I	P_{II}	L	R	P_I	P_{II}			A_1	A_2	B	C[1]	D	E
5.5	4	**0 510 901 029***	–	280	280	4000	4.9	41.1	124.1	166.9	15	40	M6 depth 13
5.5	5.5	–	**0 510 901 042***	280	280	4000	5.0	41.1	125.3	169.4	15	40	
8	4	**0 510 901 032***	**0 510 901 034***	280	280	4000	5.0	43.2	128.2	171.0	20	40	
8	5.5	**0 510 901 018***	**0 510 901 030***	280	280	4000	5.1	43.2	129.4	173.5	20	40	
8	8	–	**0 510 901 021***	280	280	4000	5.1	43.2	131.5	177.6	20	40	
11	4	–	**0 510 901 024***	280	280	3500	5.1	47.0	133.2	176.0	20	40	
11	4	–	**0 510 565 022**	280	280	3500	5.2	47.0	133.2	176.5	20	40	
11	5.5	**0 510 901 015***	**0 510 901 000***	280	280	3500	5.2	47.0	134.4	178.5	20	40	
11	5.5	–	**0 510 565 023**	280	280	3500	5.2	47.0	134.4	179.0	20	40	
11	8	**0 510 901 031***	**0 510 901 037***	280	280	3500	5.3	47.0	136.5	182.6	20	40	
11	11	**0 510 901 009***	**0 510 901 035****	280	280	3500	5.5	47.0	140.3	187.6	20	40	
14	5.5	**0 510 901 033***	–	280	280	3000	5.4	47.5	139.4	183.5	20	40	
14	8	–	**0 510 901 016***	280	280	3000	5.5	47.5	141.5	187.6	20	40	
14	11	**0 510 565 346**	–	280	280	3000	5.7	47.5	145.3	193.1	20	40	
14	11	**0 510 901 001***	**0 510 901 011***	280	280	3000	5.6	47.5	145.3	192.6	20	40	
14	14	–	**0 510 901 036***	280	280	3000	5.7	47.5	145.8	197.6	20	40	
16	4	–	**0 510 901 028***	280	280	3000	5.4	47.5	141.6	184.4	20	40	
16	5.5	**0 510 901 014***	**0 510 901 008***	280	280	3000	5.4	47.5	142.8	186.9	20	40	
16	8	**0 510 901 006***	**0 510 901 005***	280	280	3000	5.5	47.5	144.9	191.0	20	40	
16	11	**0 510 901 012***	**0 510 901 002***	280	280	3000	5.7	47.5	148.7	196.0	20	40	
16	11	**0 510 665 354**	**0 510 665 042**	280	280	3000	5.8	47.5	148.7	196.0	20	40	
16	16	**0 510 901 027***	**0 510 901 022***	280	280	3000	5.9	47.5	149.2	204.4	20	40	
19	4	–	**0 510 901 044***	230	280	3000	5.5	47.5	146.6	189.4	20	40	
19	5.5	**0 510 901 041***	**0 510 901 043***	230	280	3000	5.6	47.5	147.8	191.9	20	40	
19	8	**0 510 901 017***	**0 510 901 003***	230	280	3000	5.7	47.5	149.9	196.0	20	40	
19	8	–	**0 510 665 126****	230	280	3000	5.6	47.5	149.9	196.0	20	40	
19	8	–	**0 510 665 047**	230	280	3000	5.8	47.5	149.9	196.0	20	40	
19	11	**0 510 665 435**	**0 510 901 004***	230	280	3000	5.8	47.5	153.7	201.0	20	40	
19	14	**0 510 901 040***	**0 510 901 025***	230	280	3000	5.9	47.5	154.2	206.0	20	40	
19	16	**0 510 901 039***	**0 510 901 045***	230	230	3000	6.0	47.5	154.2	209.4	20	40	
19	19	**0 510 901 010***	–	230	190	3000	6.2	47.5	154.2	214.4	20	40	
19	19	–	**0 510 665 132**	230	190	3000	6.1	47.5	154.2	214.4	20	40	
22.5	4	–	**0 510 901 023***	210	280	2500	5.7	55.1	152.0	194.8	20	40	
22.5	5.5	–	**0 510 901 020***	210	280	2500	5.7	55.1	153.2	197.3	20	40	
22.5	8	–	**0 510 765 016**	180	280	2500	7.6	55.1	155.3	201.4	20	40	
22.5	11	**0 510 901 019***	**0 510 901 026***	210	280	2500	5.9	55.1	159.1	206.4	20	40	
22.5	14	**0 510 901 013***	**0 510 901 007***	210	280	2500	6.1	55.1	159.6	211.4	20	40	
22.5	22.5	**0 510 901 038***	–	210	180	2500	6.4	55.1	167.2	225.2	20	40	

[1]) 4 and 5.5 cm³ Ø 15

Unit dimensions

Standard range

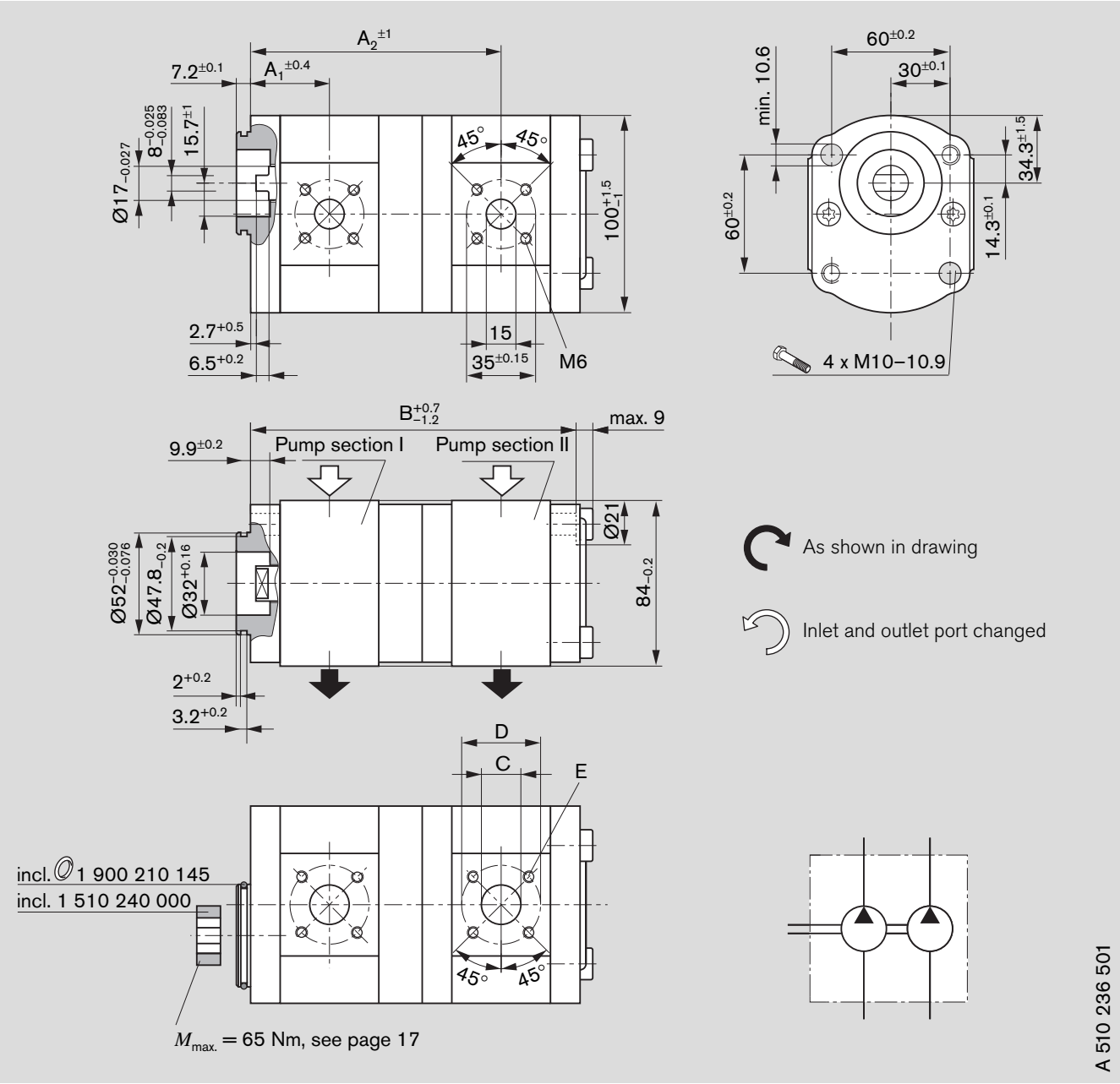

Ordering code

AZPFF – 10 – ☐☐☐ / ☐☐☐ ☐ N M 20 20 M B

Displacement [cm³/rev]		Ordering-No.		Max. operating pressure [bar]		Max. rotation speed [rpm]	kg	Dimension [mm]					
P_I	P_{II}	L	R	P_I	P_{II}			A_1	A_2	B	C[1]	D	E
5.5	4	**0 510 365 314**	**0 510 365 010**	280	280	4000	4.2	38.6	121.6	157.9	15	40	M6 depth 13
8	4	–	**0 510 465 012**	280	280	4000	4.4	40.7	125.7	162.0	20	40	
8	5.5	**0 510 465 346**	–	280	280	4000	4.4	40.7	126.9	164.5	20	40	
8	8	–	**0 510 465 008**	280	380	4000	5.6	40.7	129.0	168.6	20	40	
11	4	**0 510 565 329**	**0 510 565 015**	280	280	3500	4.5	44.5	130.7	167.0	20	40	
11	5.5	–	**0 510 565 016**	280	280	3500	4.6	44.5	131.9	169.5	20	40	
11	8	**0 510 565 379**	**0 510 565 078**	280	280	3500	4.65	44.5	134.0	173.6	20	40	
16	16	**0 510 665 339**	**0 510 665 030**	280	230	3000	5.2	45.0	146.7	195.4	20	40	
22.5	8	**0 510 765 312**	–	210	280	2500	5.2	52.5	152.8	192.4	20	40	

[1]) 4 and 5.5 cm³ Ø 15

Unit dimensions

Standard range

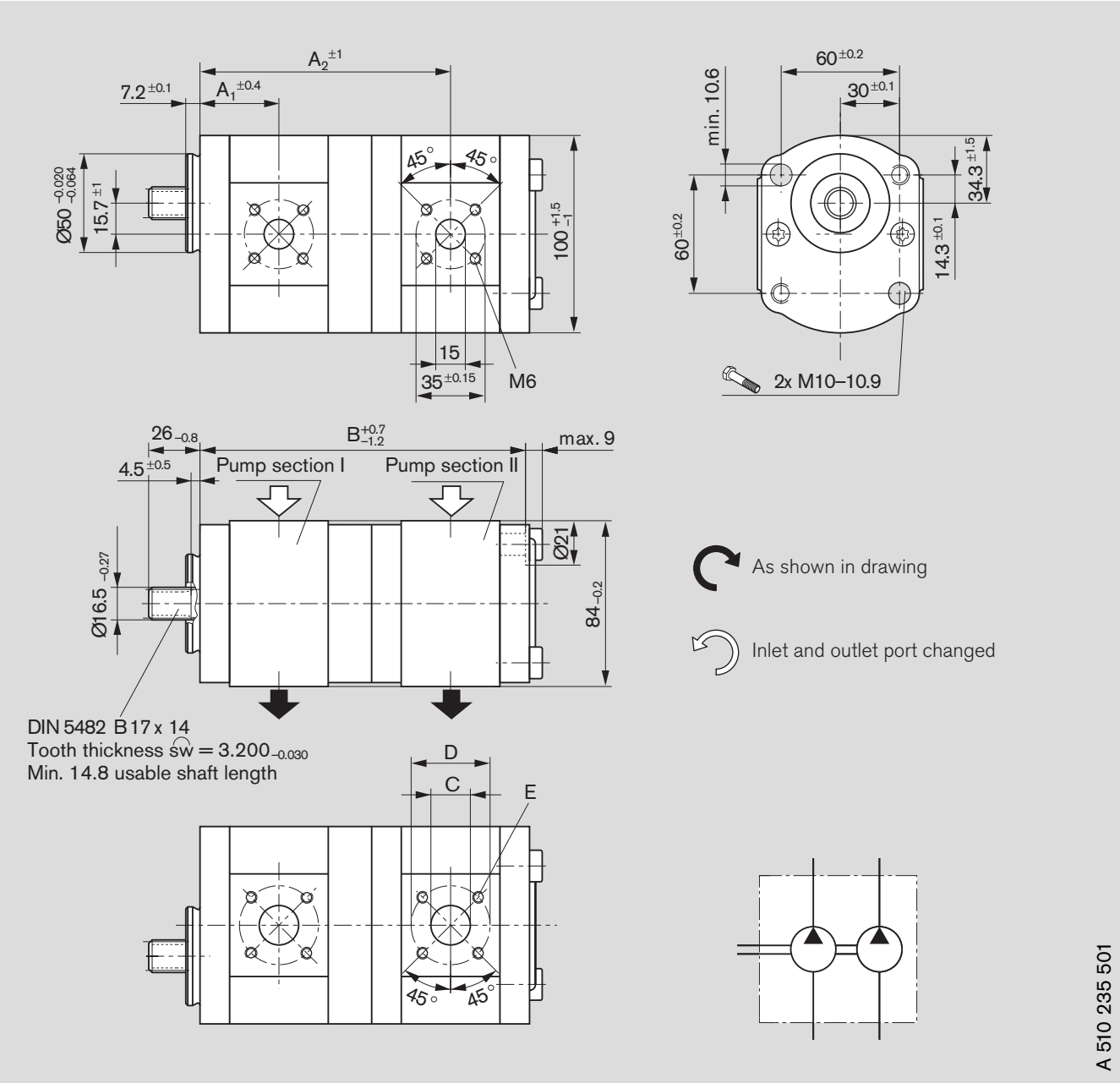

Ordering code

AZPFF – 10 – □□□ / □□□ □ F P 20 20 M B

AZPFF – 10 – □□□ / □□□ □ F P 20 20 K B*

Displacement [cm³/rev] P_I	P_{II}	Ordering-No. L	R	Max. operating pressure [bar] P_I	P_{II}	Max. rotation speed [rpm]	kg	Dimension [mm] A_1	A_2	B	C [1])	D	E
8	4	**0 510 465 355**	–	280	280	4000	4.4	40.7	125.7	162.0	20	40	M6 depth 13
11	8	**0 510 565 385**	–	280	280	3500	4.6	44.5	134.0	173.6	20	40	
16	8	–	**0 510 665 071**	280	280	3000	4.85	45.0	142.4	182.0	20	40	
16	11	–	**0 510 665 076**	280	280	3000	4.98	45.0	146.2	187.0	20	40	
16	14	**0 510 665 404***	–	280	280	3000	5.12	45.0	146.7	192.0	20	40	
16	16	**0 510 665 376**	**0 510 665 062**	280	230	3000	5.2	45.0	146.7	195.4	20	40	

[1]) 4 and 5.5 cm³ Ø 15

Unit dimensions

Standard range

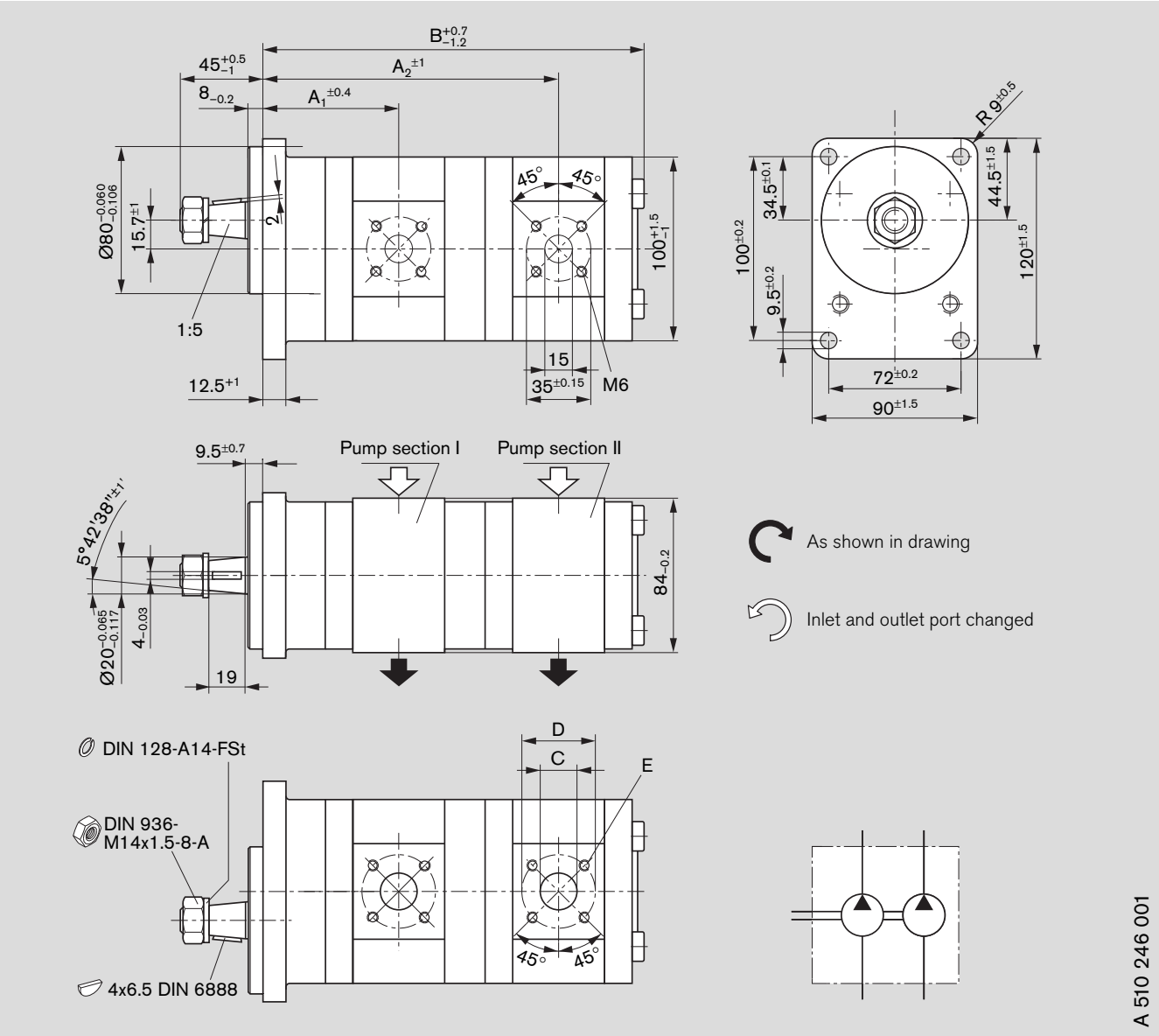

Ordering code

AZPFF – 10 – ☐ ☐ ☐ / ☐ ☐ ☐ ☐ S A 20 20 M B

Displacement [cm³/rev] P_I	P_{II}	Ordering-No. L	R	Max. operating pressure [bar] P_I	P_{II}	Max. rotation speed [rpm]	kg	Dimension [mm] A_1	A_2	B	C[1)]	D	E
4	4	**0 510 255 300**	–	280	280	4000	4.8	71.3	153.0	197.0	15	40	M6 depth 13
5.5	4	**0 510 355 301**	–	280	280	4000	5.0	72.6	155.5	199.5	15	40	
8	5.5	**0 510 455 300**	**0 510 455 001**	280	280	4000	5.2	74.6	160.8	206.1	20	40	
8	8	**0 510 455 301**	**0 510 455 002**	280	280	4000	5.3	74.6	163.0	210.2	20	40	
11	5.5	**0 510 555 300**	**0 510 555 001**	280	280	3500	5.3	79.0	165.8	211.1	20	40	
11	8	**0 510 555 301**	**0 510 555 002**	280	280	3500	5.4	79.0	168.0	215.2	20	40	
11	11	**0 510 555 302**	**0 510 555 003**	280	280	3500	5.5	79.0	172.3	220.2	20	40	
16	4	**0 510 655 300**	**0 510 655 001**	280	280	3000	6.4	79.0	173.0	217.0	20	40	
16	5.5	**0 510 655 301**	**0 510 655 002**	280	280	3000	5.5	79.0	174.2	219.5	20	40	
16	8	**0 510 655 302**	**0 510 655 003**	280	280	3000	5.6	79.0	176.3	223.6	20	40	
16	11	**0 510 655 303**	**0 510 655 004**	280	280	3000	5.7	79.0	180.7	228.6	20	40	
16	16	**0 510 655 304**	**0 510 655 005**	280	230	3000	6.0	79.0	180.7	237.0	20	40	

[1)] 4 and 5.5 cm³ Ø 15

Unit dimensions

Standard range

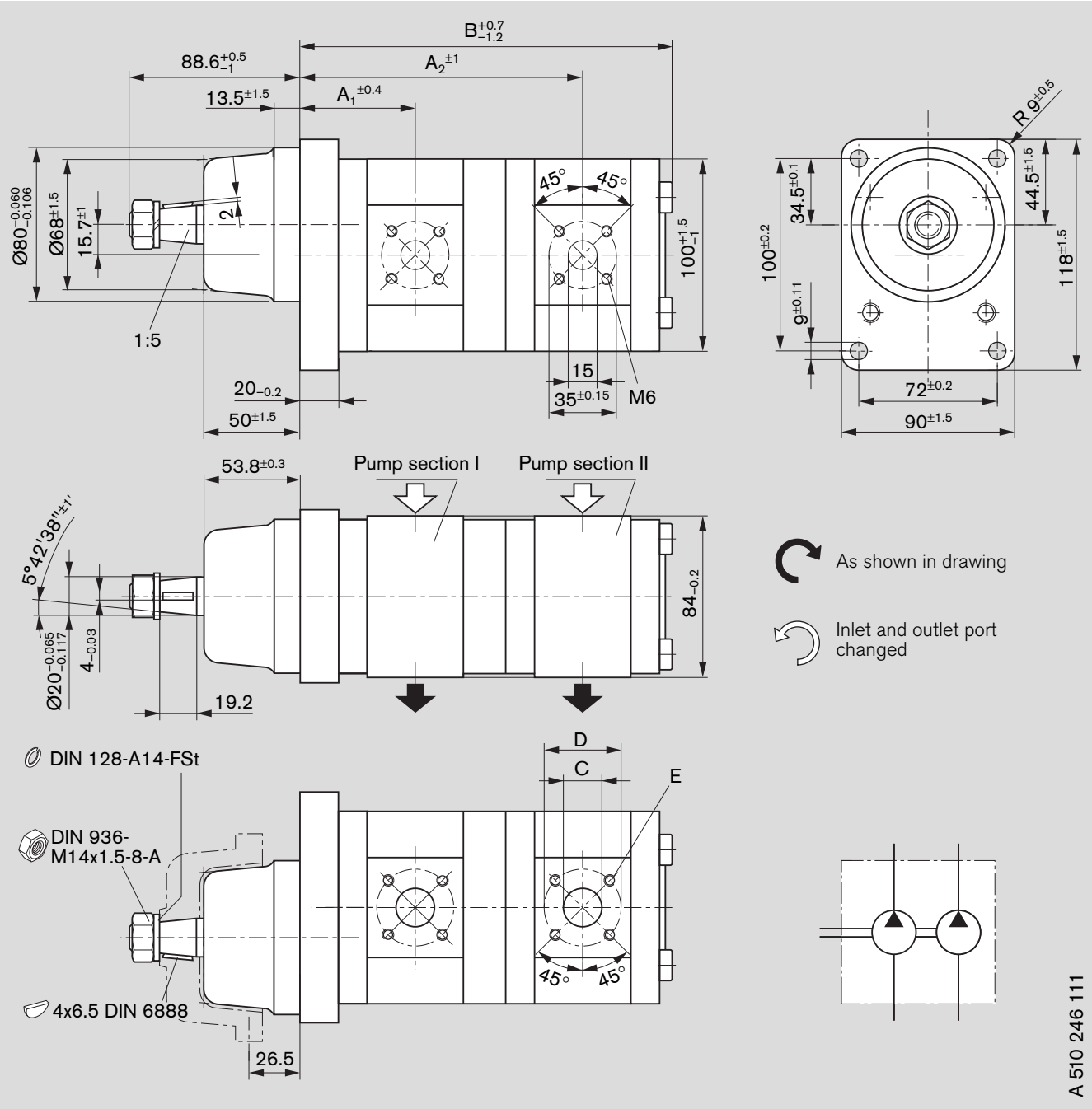

Ordering code:

AZPFF – 10 – □□□ / □□□ □ S G 20 20 P B

Displacement [cm³/rev]		Ordering-No.		Max. operating pressure [bar]		Max. rotation speed [rpm]	kg	Dimension [mm]					
P_I	P_{II}	L	R	P_I	P_{II}			A_1	A_2	B	C [1]	D	E
16	16	–	**0 510 655 007**	280	280	3000	6.2	65.0	166.7	221.9	20	40	M6 depth 13
19	19	–	**0 510 655 011**	230	190	3000	6.6	65.0	171.7	231.9	20	40	

[1]) 4 and 5.5 cm³ Ø 15

Unit dimensions

Standard range

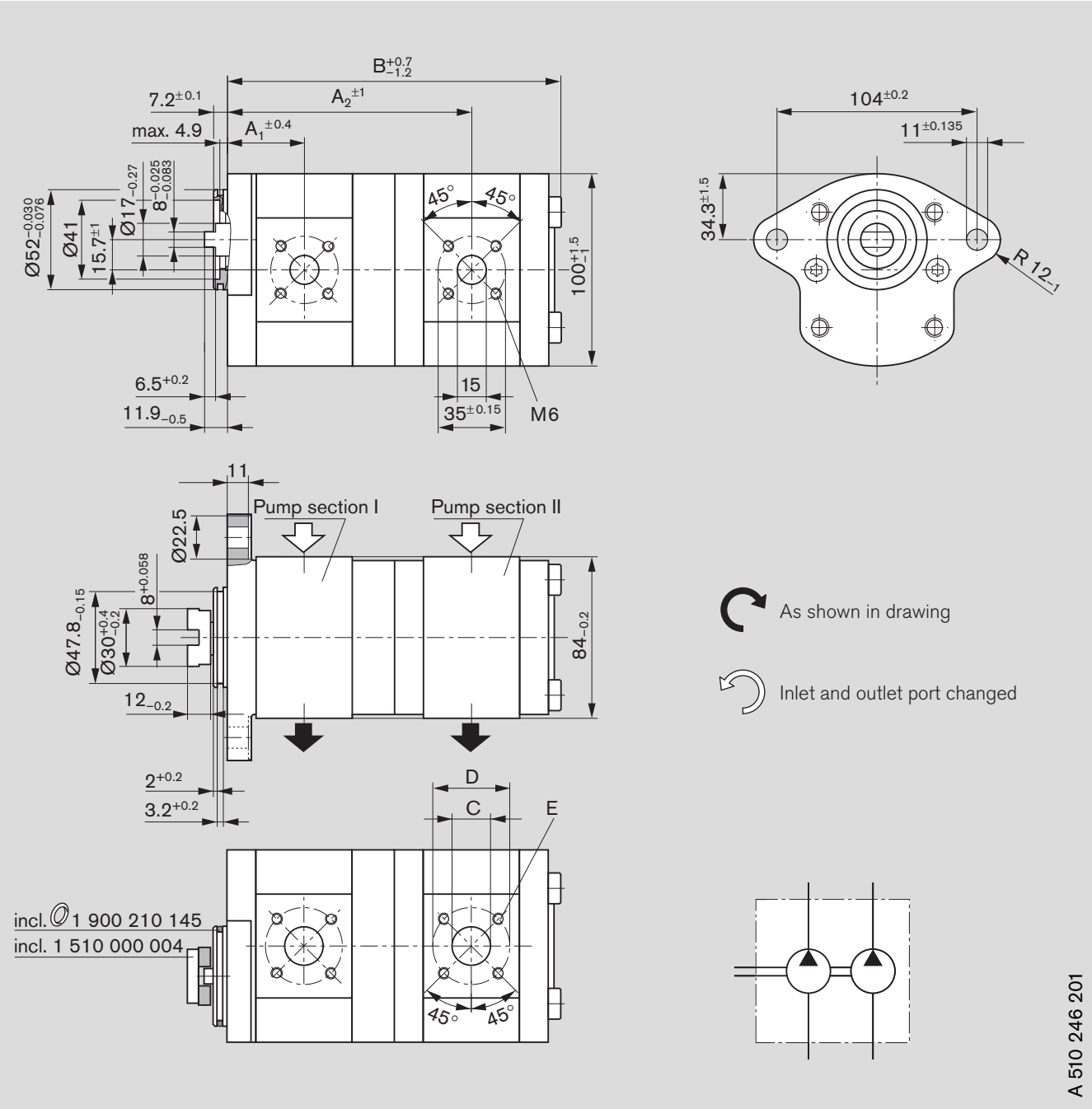

Ordering code

AZPFF – 10 – □□□ / □□□ □ N L 20 20 K B

Displacement [cm³/rev] P_I	P_{II}	Ordering-No. L	Ordering-No. R	Max. operating pressure [bar] P_I	P_{II}	Max. rotation speed [rpm]	kg	Dimension [mm] A_1	A_2	B	C [1])	D	E
5.5	5.5	–	**0 510 365 009**	280	280	4000	4.65	38.6	122.8	169.2	15	40	M6 depth 13
11	11	–	**0 510 565 043**	280	280	3500	5.2	44.5	137.5	187.4	20	40	
16	8	**0 510 665 449**	–	280	280	3000	5.2	45.0	142.4	188.4	20	40	
16	22.5	**0 510 665 068**	–	280	160	2500	6.17	45.0	160.3	226.6	20	40	

[1]) 4 and 5.5 cm³ Ø 15

Unit dimensions

Standard range

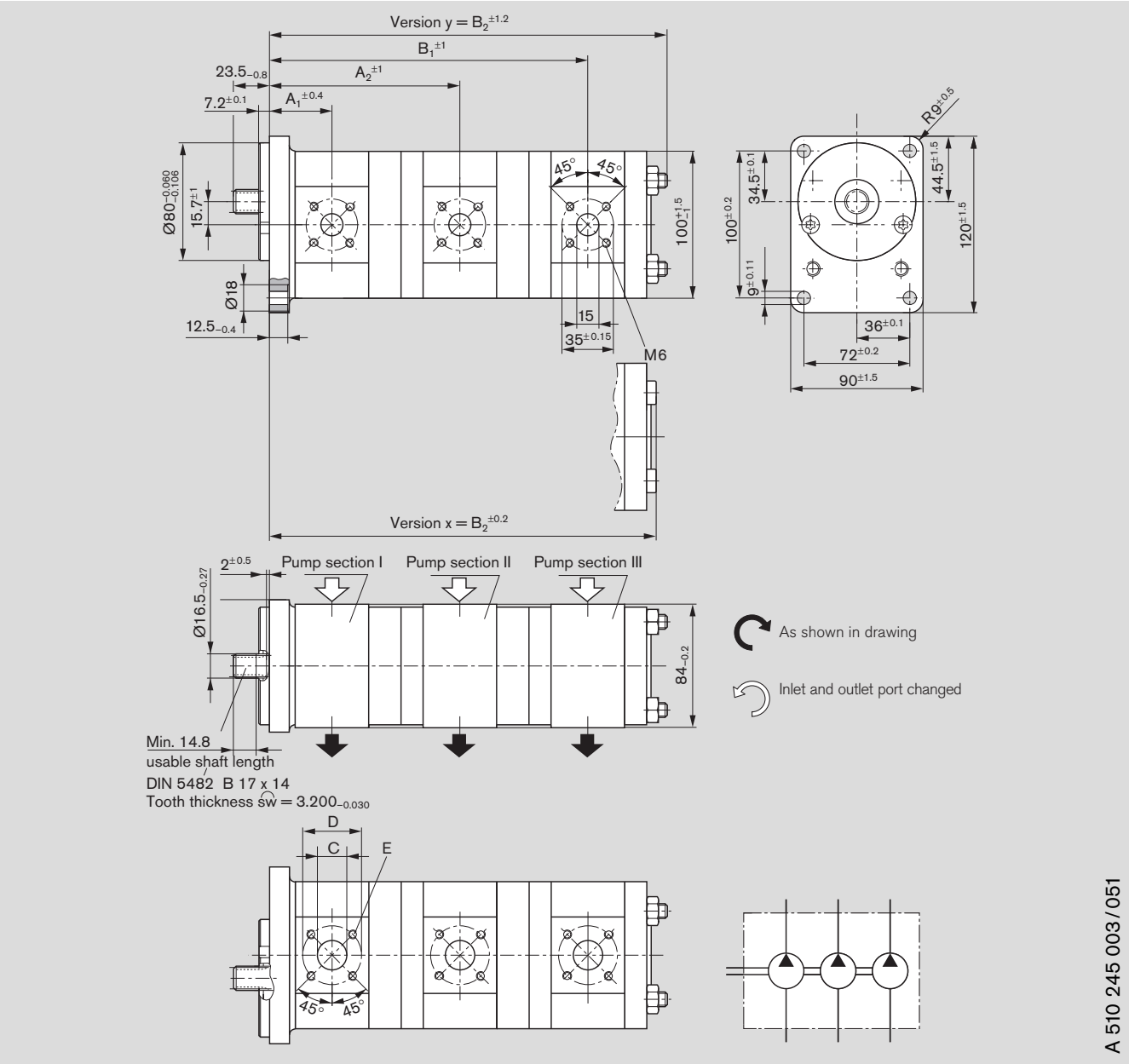

Ordering code

AZPFFF – 10 – ☐☐☐ / ☐☐☐ / ☐☐☐ ☐ F B 20 20 20 M B

AZPFFF – 11 – ☐☐☐ / ☐☐☐ / ☐☐☐ ☐ F B 20 20 20 M B*

Displacement [cm³/rev]			Ordering-No.		Max. operating pressure [bar]			Max. rotation speed [rpm]	kg	Dimension [mm]							Version
P_I	P_{II}	P_{III}	L	R	P_I	P_{II}	P_{III}			A_1	A_2	B_1	B_2	C[1]	D	E	
11	4	4	**0 510 565 371**	–	280	280	280	3500	6.9	47.0	133.2	214.9	259.0	20	40	M6	y
14	4	8	**0 510 565 408**	–	280	280	280	3000	7.2	47.5	138.2	223.2	270.6	20	40	depth 13	x
14	8	8	**0 510 565 422**	–	280	280	280	3000	7.3	47.5	141.5	229.8	275.9	20	40		x
16	4	4	**0 510 665 379**	–	280	280	280	3000	7.2	47.5	141.6	223.3	267.4	20	40		x
16	5.5	5.5	**0 510 665 416**	**0 510 665 061**	280	280	280	3000	7.4	47.5	142.8	227.0	272.4	20	40		x
16	11	4	**0 510 665 372**	–	280	210	210	3000	7.5	47.5	148.7	234.9	276.5	20	40		x
16	11	5.5	–	**0 510 665 092***	280	210	120	3000	7.6	47.5	148.7	236.1	280.2	20	40		x
16	16	11	**0 510 665 371**	–	280	120	120	3000	8.1	47.5	149.2	250.4	302.5	20	40		x
19	8	5.5	–	**0 510 665 111***	230	250	160	3000	7.5	47.5	149.2	236.1	280.2	20	40		x
19	11	5.5	–	**0 510 665 112***	230	230	230	3000	7.6	47.5	153.7	241.1	285.2	20	40		x

[1]) 4 and 5.5 cm³ Ø 15

Unit dimensions

Standard range

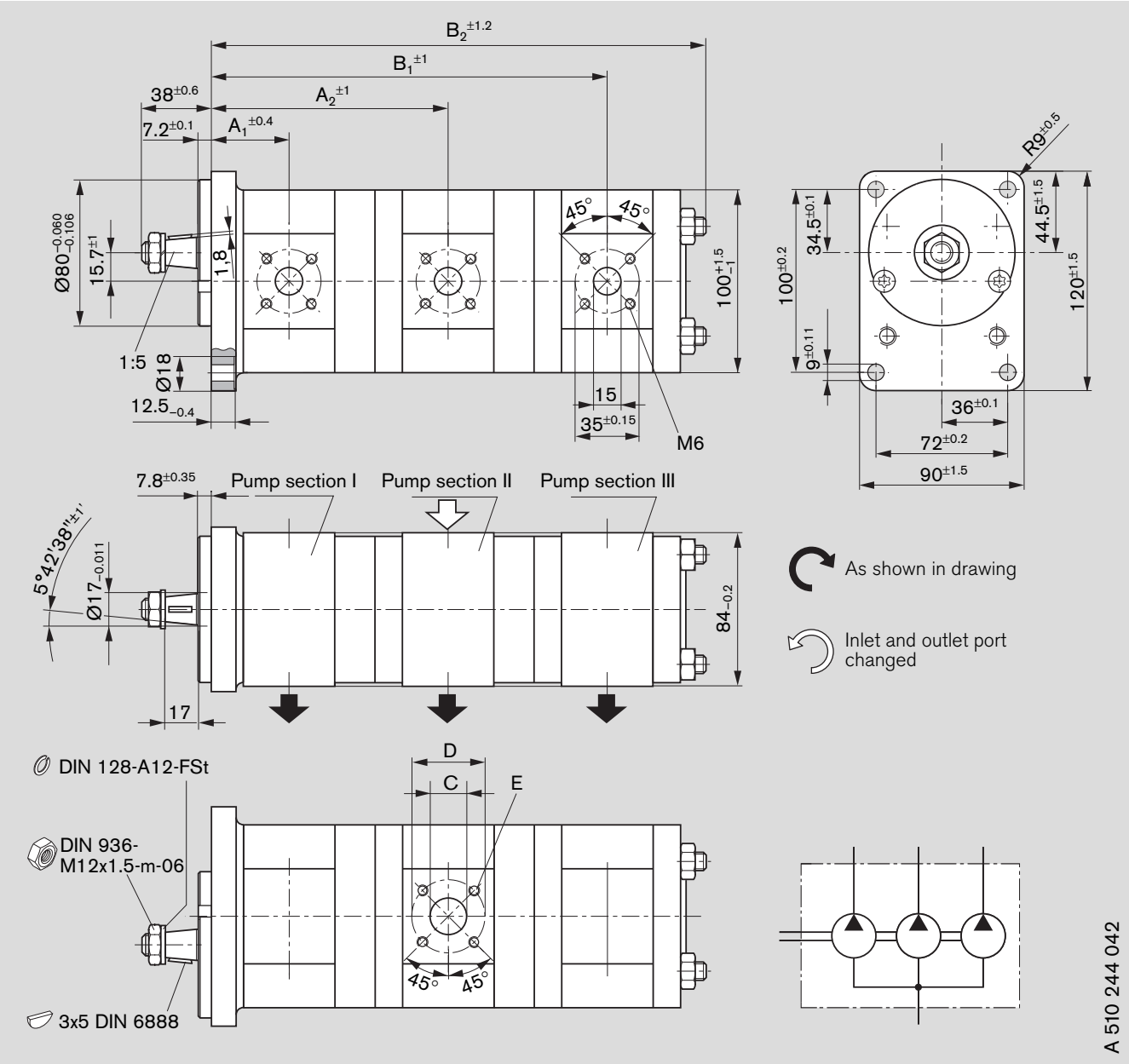

Ordering code

AZPFFF – 11 – ☐☐☐ / ☐☐☐ / ☐☐☐ ☐ C B 20 20 20 M B

Displacement [cm³/rev] P_I	P_{II}	P_{III}	Ordering-No. L	Ordering-No. R	Max. operating pressure [bar] P_I	P_{II}	P_{III}	Max. rotation speed [rpm]	kg	Dimension [mm] A_1	A_2	B_1	B_2	C[1]	D	E
8	8	5.5	–	**0 510 465 031**	230	230	230	4000	6.5	43.2	119.5	193.7	238.1	20	40	M6 depth 13
11	11	8	–	**0 510 565 065**	230	230	230	3500	6.8	47.0	128.3	205.8	251.9	20	40	
11	11	8	–	**0 510 565 080**[2]	280	280	280	3500	6.8	47.0	128.3	205.8	251.9	20	40	

[1]) 4 and 5.5 cm³ Ø 15

[2]) heavy through drive

Unit dimensions

Standard range

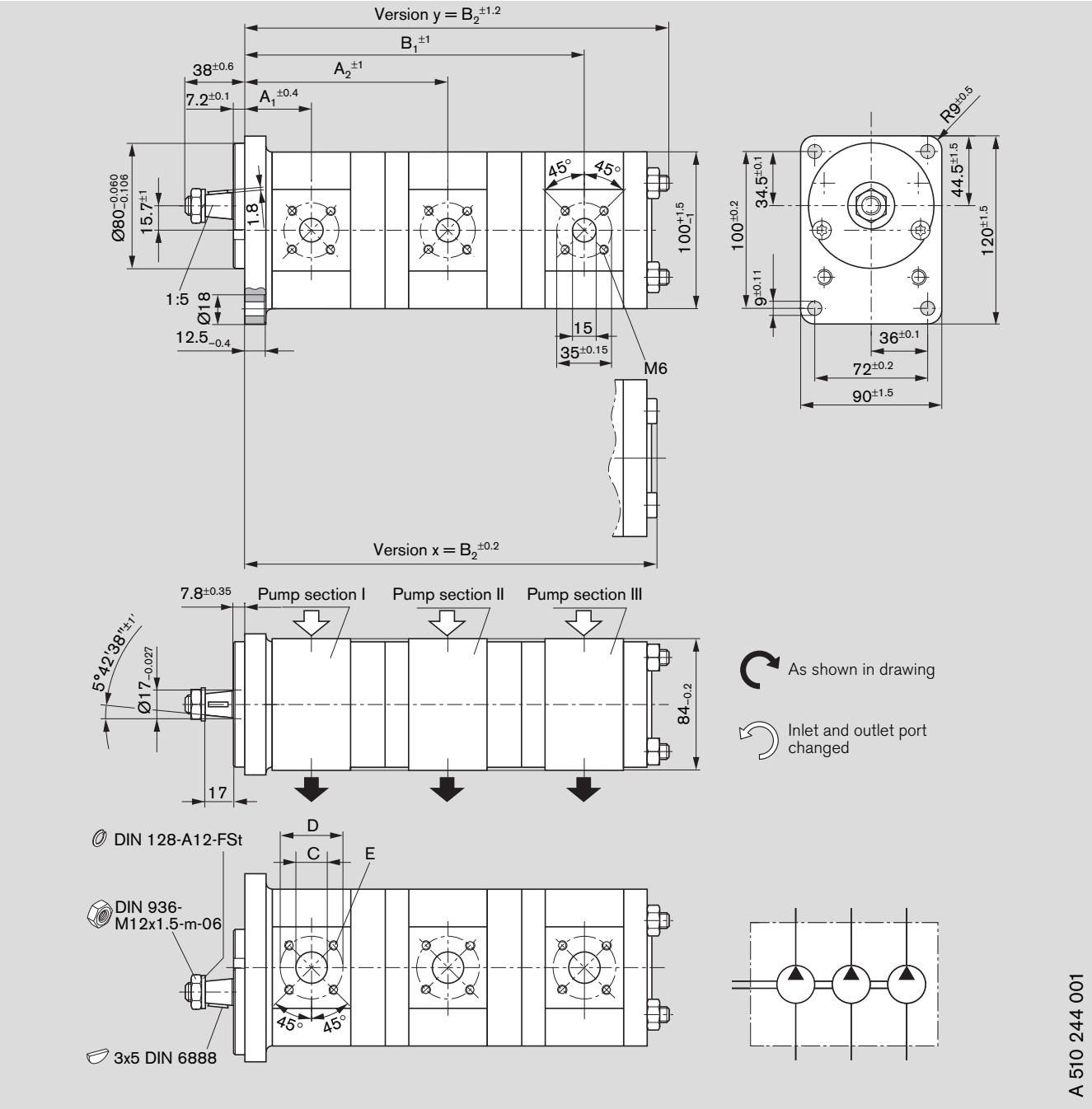

Ordering code

AZPFFF – 10 – ☐☐☐ / ☐☐☐ / ☐☐☐ ☐ C B 20 20 20 M B

AZPFFF – 11 – ☐☐☐ / ☐☐☐ / ☐☐☐ ☐ C B 20 20 20 K B*

Displacement [cm³/rev]			Ordering-No.		Max. operating pressure [bar]			Max. rotation speed	kg	Dimension [mm]							Version
P_I	P_{II}	P_{III}	L	R	P_I	P_{II}	P_{III}	[rpm]		A_1	A_2	B_1	B_2	C[1]	D	E	
8	8	4	–	**0 510 465 027**	280	280	280	4000	7.0	43.2	131.5	216.5	260.6	20	40	M6 depth 13	x
11	8	8	–	**0 510 565 081**	280	230	230	3500	7.2	47.0	136.5	224.8	272.2	20	40		x
16	4	4	**0 510 665 419***	–	280	280	280	3000	7.1	47.5	141.6	223.3	267.4	20	40		x
16	8	4	–	**0 510 665 134**	280	280	280	3000	7.3	47.5	144.9	229.9	272.7	20	40		x
22.5	8	9	**0 510 765 334***	–	230	210	210	3000	8.15	61.6	167.3	255.6	307.5	20	40		y

[1]) 4 and 5.5 cm³ Ø 15

Unit dimensions

Standard range

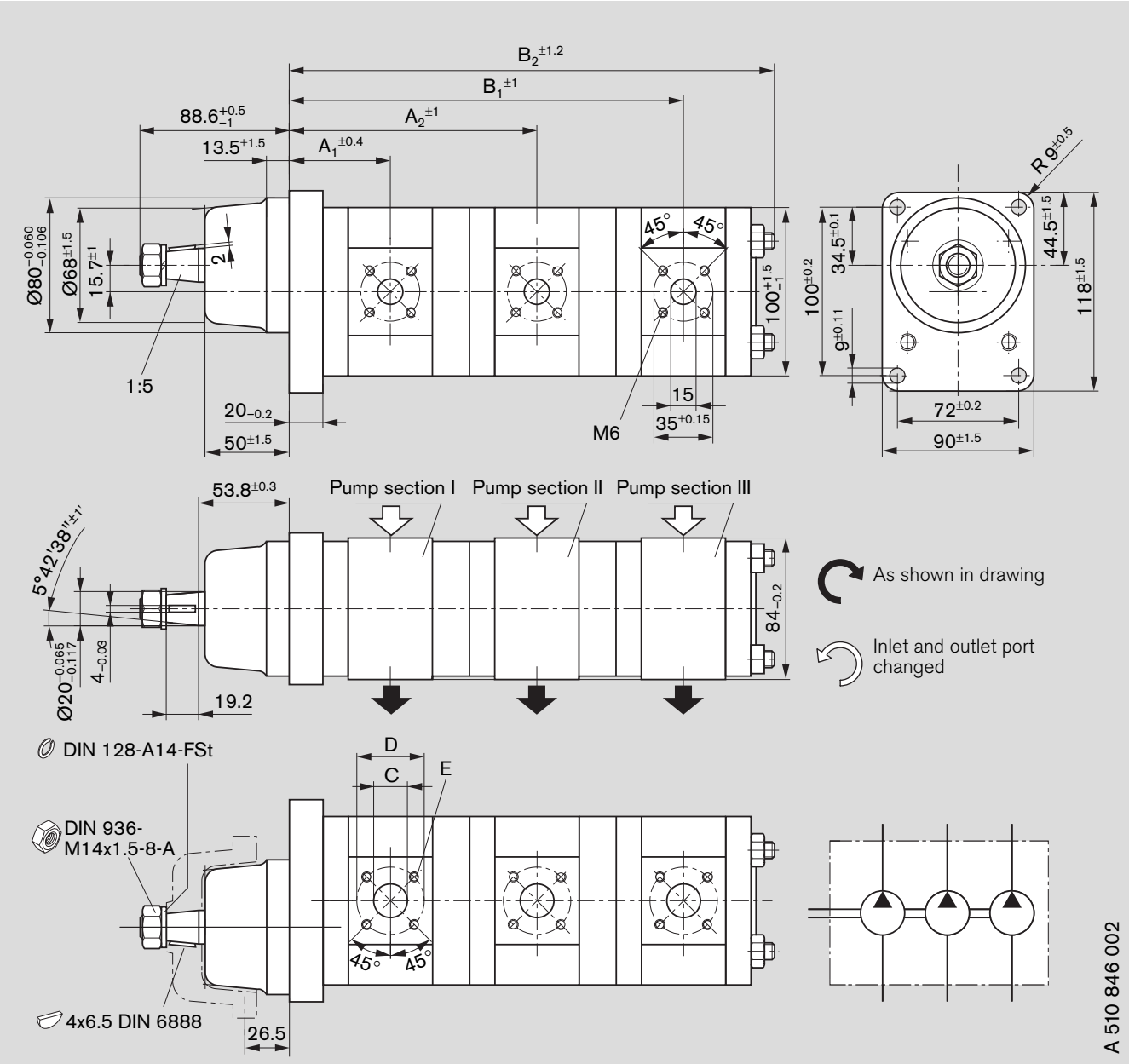

Ordering code

AZPFFF – 10 – ☐☐☐ / ☐☐☐ / ☐☐☐ ☐ S G 20 20 20 M B

Displacement [cm³/rev] P_I	P_{II}	P_{III}	Ordering-No. L	Ordering-No. R	Max. operating pressure [bar] P_I	P_{II}	P_{III}	Max. rotation speed [rpm]	kg	Dimension [mm] A_1	A_2	B_1	B_2	C[1]	D	E
8	8	5.5	–	**0 510 455 004**	280	250	250	4000	7.4	60.7	149.0	235.2	284.0	20	40	M6 depth 13
14	14	5.5	–	**0 510 555 007**	280	210	210	3000	7.9	65.0	163.3	255.3	304.0	20	40	

[1]) 4 and 5.5 cm³ Ø 15

Unit dimensions

Standard range

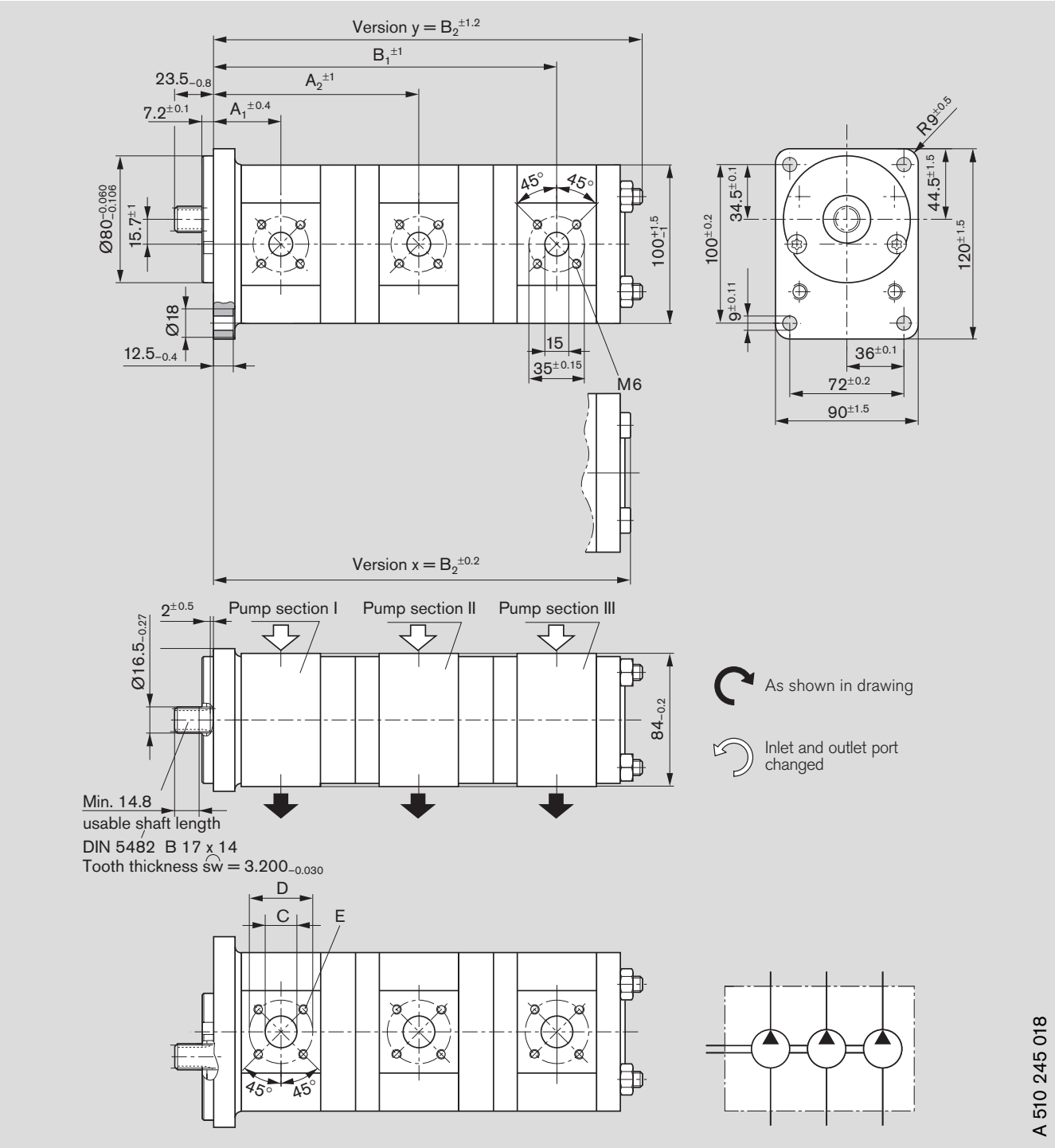

Ordering code

AZPFFF – 10 – ☐☐☐ / ☐☐☐ / ☐☐☐ ☐ F B 20 20 20 M B

Displacement [cm³/rev] P_I	P_{II}	P_{III}	Ordering-No. L	Ordering-No. R	Max. operating pressure [bar] P_I	P_{II}	P_{III}	Max. rotation speed [rpm]	kg	Dimension [mm] A_1	A_2	B_1	B_2	C[1]	D	E	Version
8	8	4	–	**0 510 465 019**	280	280	280	4000	7.0	43.2	131.5	216.5	260.8	20	40	M6	x
19	16	4	**0 510 665 380**	–	230	190	190	3000	7.8	47.5	154.2	248.3	297.5	20	40	depth 13	y

[1]) 4 and 5.5 cm³ Ø 15

Unit dimensions

Standard range

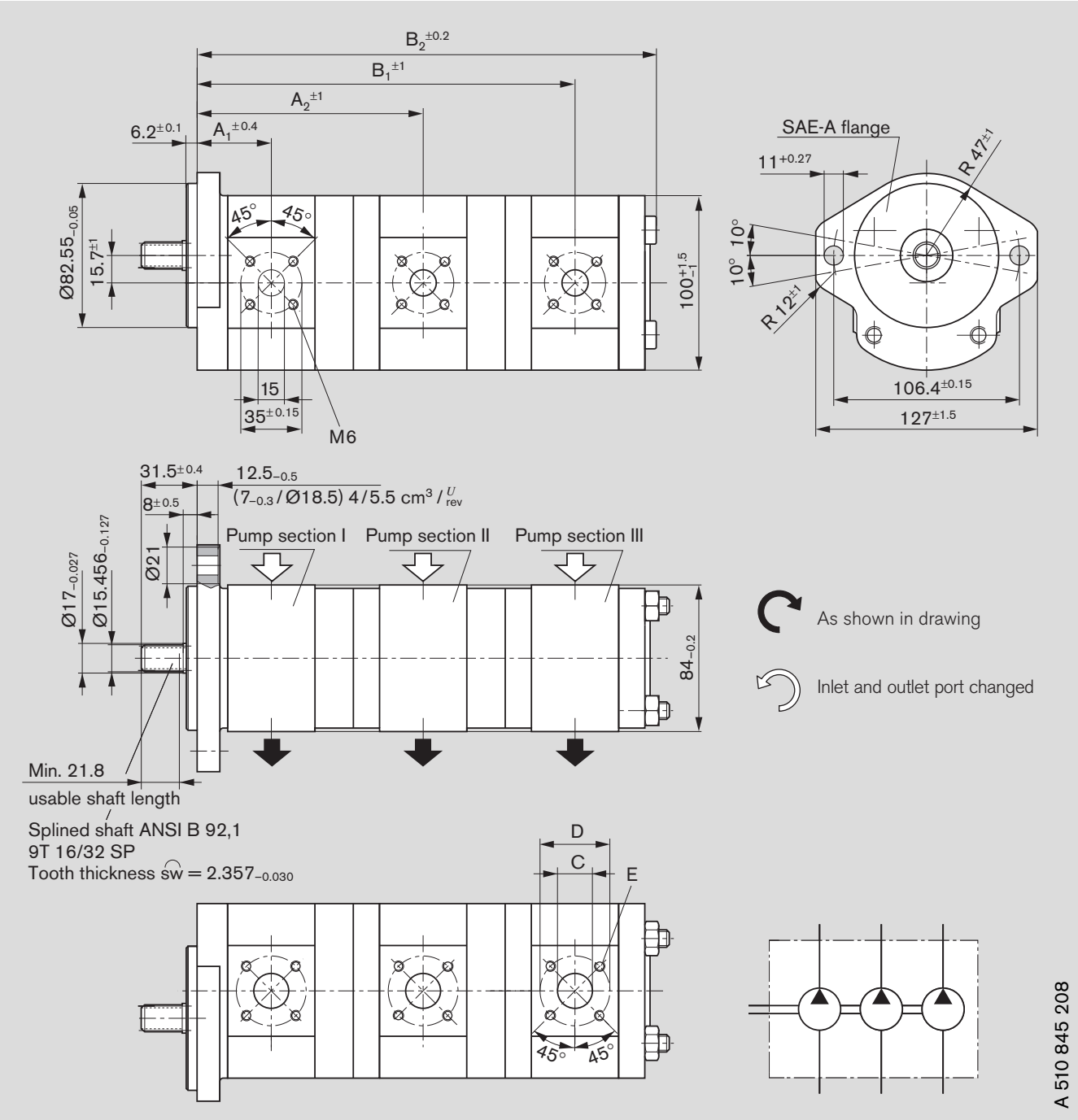

Ordering code:

AZPFFF – 10 – □ □ □ / □ □ □ / □ □ □ □ R R 20 20 20 M B

Displacement [cm³/rev] P_I	P_{II}	P_{III}	Ordering-No. L	Ordering-No. R	Max. operating pressure [bar] P_I	P_{II}	P_{III}	Max. rotation speed [rpm]	kg	Dimension [mm] A_1	A_2	B_1	B_2	C[1]	D	E
8	5.5	5.5	–	**0 510 465 025**	280	280	280	4000	7.0	43.2	129.4	213.6	257.7	20	40	M6 depth 13

[1]) 4 and 5.5 cm³ Ø 15

Notes for commissioning

Filter recommendation
The major share of premature failures in external gear pumps is caused by contaminated pressure fluid.
As a warranty cannot be issued for dirt-specific wear, we recommended filtration compliant with cleanliness level 20/18/15 ISO 4406, which reduces the degree of contamination to a permissible dimension in terms of the size and concentration of dirt particles:

Operating pressure [bar]	>160	<160
Contamination class ISO 4406	18/15	19/16
To be reached with $\beta_X = 75$	20	25

We recommend that a full-flow filter always be used.
Basic contamination of the pressure fluid used may not exceed class 20/18/15 according to ISO 4406. Experience has shown that new fluid quite often lies above this value. In such instances a filling device with special filter should be used.

General
- The pumps supplied by us have been checked for function and performance. No modifications of any kind may be made to the pumps; any such changes will render the warranty null and void!
- Pump may only be operated in compliance with permitted data (see pages 15 – 18).

Project planning notes
Comprehensive notes and suggestions are available in Hydraulics Trainer, Volume 3 RE 00 281, “Project planning notes and design of hydraulic systems”. Where external gear pumps are used we recommend that the following note be adhered to.

Technical data
All stated technical data is dependent on production tolerances and is valid for specific marginal conditions.
Note that, as a consequence, scattering is possible, and at certain marginal conditions (e.g. viscosity) **the technical data may change**.

Characteristics
When designing the external gear pump, note the maximum possible service data based on the characteristics displayed on pages 10 to 12.

Additional information on the proper handling of hydraulic products from Bosch Rexroth is available in our document: “General product information for hydraulic products” RE 07 008.

Contained in delivery
The components with characteristics as described under device measurements and ordering code, pages 11 – 13, are contained in delivery.

You can find further information in our publication: “General Operating Instructions for External Gear Units” RE 07 012-B1.

Service parts

Page	Ordering code	Seal kit Pos. 800 1 517 010 ...		Shaft seal ring Pos. 3 1 510 283 ...	Material	Dimension	Seal ring Pos. 31 1 900 210 ...	Material	Dimension
20	AZPF – 1x – □□□ □ CB 20 MB	152	NBR	008	NBR	17 x 30 x 7			
21	AZPF – 1x – □□□ □ FB 20 MB	152	NBR	008	NBR	17 x 30 x 7			
22	AZPF – 1x – □□□ □ HO 30 KB	152	NBR	044	FPM	18 x 30 x 7			
23	AZPF – 1x – □□□ □ FO 30 MB	152	NBR	008	NBR	17 x 30 x 7			
23	AZPF – 1x – □□□ □ FO 30 PB	193	FPM	027	FPM	17 x 30 x 7			
24	AZPF – 1x – □□□ □ HO 01 MB	152	NBR	008	NBR	17 x 30 x 7			
25	AZPF – 1x – □□□ □ AB 01 MB	206	FPM	037	NBR	18 x 30 x 6			
26	AZPF – 1x – □□□ □ CP 20 MB	152	NBR	008	NBR	17 x 30 x 7			
26	AZPF – 1x – □□□ □ CP 20 KB	152	NBR	027	FPM	17 x 30 x 7			
27	AZPF – 1x – □□□ □ CN 20 MB	152	NBR	008	NBR	17 x 30 x 7	145	NBR	45 x 2.5
28	AZPF – 1x – □□□ □ FN 20 MB	152	NBR	008	NBR	17 x 30 x 7			
29	AZPF – 1x – □□□ □ FP 20 PB	193	FPM	027	FPM	17 x 30 x 7			
30	AZPF – 1x – □□□ □ NT 20 MB	152	NBR	008	NBR	17 x 30 x 7	145	NBR	45 x 2.5
31	AZPF – 1x – □□□ □ NL 20 KB	152	NBR	027	FPM	17 x 30 x 7	145	NBR	45 x 2.5
32	AZPF – 1x – □□□ □ QR 12 MB	152	NBR	008	NBR	17 x 30 x 7			
33	AZPF – 1x – □□□ □ RR 12 MB	152	NBR	008	NBR	17 x 30 x 7			
34	AZPF – 1x – □□□ □ RR 20 MB	152	NBR	008	NBR	17 x 30 x 7			
34	AZPF – 1x – □□□ □ RR 20 KB	152	NBR	027	FPM	17 x 30 x 7			
35	AZPF – 1x – □□□ □ QR 20 MB	152	NBR	008	NBR	17 x 30 x 7			
36	AZPF – 1x – □□□ □ SA 20 MB	152	NBR	008	NBR	17 x 30 x 7	145	NBR	45 x 2.5
36	AZPF – 1x – □□□ □ SA 20 KB	152	NBR	015	FPM	17 x 30 x 7	145	NBR	45 x 2.5
37	AZPF – 1x – □□□ □ SG 20 MB	152	NBR	009	NBR	20 x 40 x 7	145	NBR	45 x 2.5
39	AZPF – 1x – □□□ □ CP 20 20 KB	152	NBR	027/008	NBR	17 x 30 x 7	145	NBR	45 x 2.5
41	AZPFF – 1x – □□□ / □□□ □ FB 20 20 MB	152 (2x)	NBR	008 (2x)	NBR	17 x 30 x 7	145	NBR	45 x 2.5
43	AZPFF – 1x – □□□ / □□□ □ CB 20 20 MB	152 (2x)	NBR	008 (2x)	NBR	17 x 30 x 7	145	NBR	45 x 2.5
45	AZPFF – 1x – □□□ / □□□ □ HO 20 20 MB	152 (2x)	NBR	008 (2x)	NBR	17 x 30 x 7	145	NBR	45 x 2.5
45	AZPFF – 1x – □□□ / □□□ □ HO 20 20 KB	152 (2x)	NBR	027/008	FPM/ NBR	17 x 30 x 7	145	NBR	45 x 2.5
47	AZPFF – 1x – □□□ / □□□ □ RR 20 20 MB	152 (2x)	NBR	008 (2x)	NBR	17 x 30 x 7	145	NBR	45 x 2.5
47	AZPFF – 1x – □□□ / □□□ □ RR 20 20 KB	152 (2x)	NBR	027 (2x)	FPM	17 x 30 x 7	145	NBR	45 x 2.5
48	AZPFF – 1x – □□□ / □□□ □ NM 20 20 MB	152 (2x)	NBR	008	NBR	17 x 30 x 7	145	NBR	45 x 2.5
49	AZPFF – 1x – □□□ / □□□ □ FP 20 20 MB	152	NBR	008 (2x)	NBR	17 x 30 x 7	145	NBR	45 x 2.5
49	AZPFF – 1x – □□□ / □□□ □ FP 20 20 KB	152 (2x)	NBR	027	FPM	17 x 30 x 7	145	NBR	45 x 2.5
50	AZPFF – 1x – □□□ / □□□ □ SA 20 20 MB	152 (2x)	NBR	008/009	NBR	17 x 30 x 7	145	NBR	45 x 2.5
51	AZPFF – 1x – □□□ / □□□ □ SG 20 20 PB	193 (2x)	FPM	015/027	FPM	17 x 30 x 7	1 520 210 101	FPM	45 x 2.5
52	AZPFF – 1x – □□□ / □□□ □ NL 20 20 KB	152 (2x)	NBR	027 (2x)	FPM	17 x 30 x 7	145	NBR	45 x 2.5
53	AZPFFF – 1x – □□□ / □□□ / □□□ □ FB 20 20 20 MB	152 (3x)	NBR	008 (3x)	NBR	17 x 30 x 7	145 (2x)	NBR	45 x 2.5
54	AZPFFF – 1x – □□□ / □□□ / □□□ □ CB 20 20 20 MB	152 (3x)	NBR	008 (3x)	NBR	17 x 30 x 7	145 (2x)	NBR	45 x 2.5
55	AZPFFF – 1x – □□□ / □□□ / □□□ □ CB 20 20 20 MB	152 (3x)	NBR	008 (3x)	NBR	17 x 30 x 7	145 (2x)	NBR	45 x 2.5
55	AZPFFF – 1x – □□□ / □□□ / □□□ □ CB 20 20 20 KB	152 (3x)	NBR	027/008 (2x)	FPM/ NBR	17 x 30 x 7	145	NBR	45 x 2.5
56	AZPFFF – 1x – □□□ / □□□ / □□□ □ SG 20 20 20 MB	152 (3x)	NBR	008 (3x)	NBR	17 x 30 x 7	145 (2x)	NBR	45 x 2.5
57	AZPFFF – 1x – □□□ / □□□ / □□□ □ FB 20 20 20 MB	152 (3x)	NBR	008 (3x)	NBR	17 x 30 x 7	145 (2x)	NBR	45 x 2.5
58	AZPFFF – 1x – □□□ / □□□ / □□□ □ RR 20 20 20 MB	152 (3x)	NBR	008 (3x)	NBR	17 x 30 x 7	145 (2x)	NBR	45 x 2.5

NBR = Perbunan® FPM = Viton®

For further service parts refer to CD-ROM HYparts 1 987 760 010

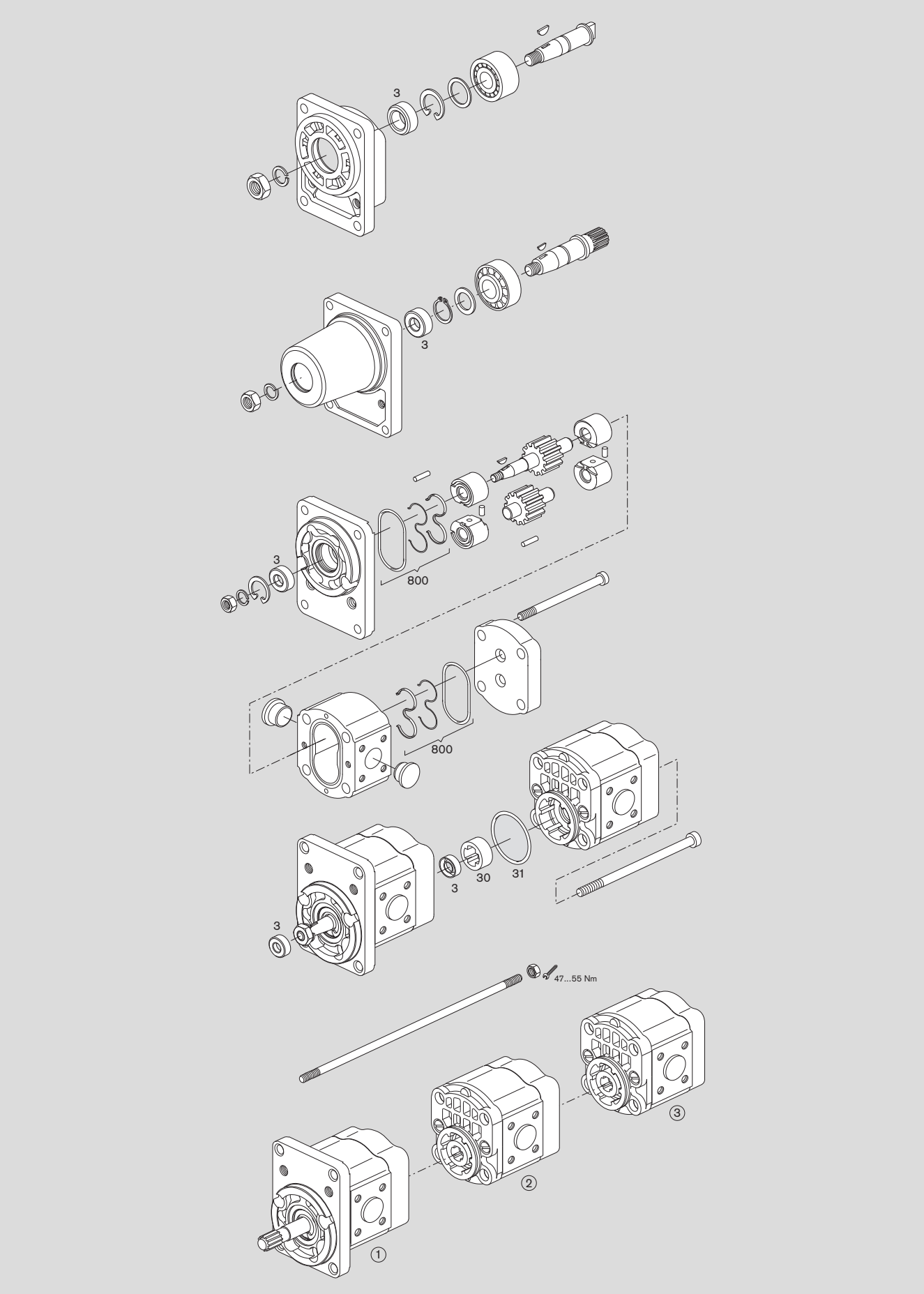
3
3
3
800
800
3
30
31
3
47...55 Nm
①
②
③

Fittings

Gear pump flange, straight, for rectangular flange 20 see page 9

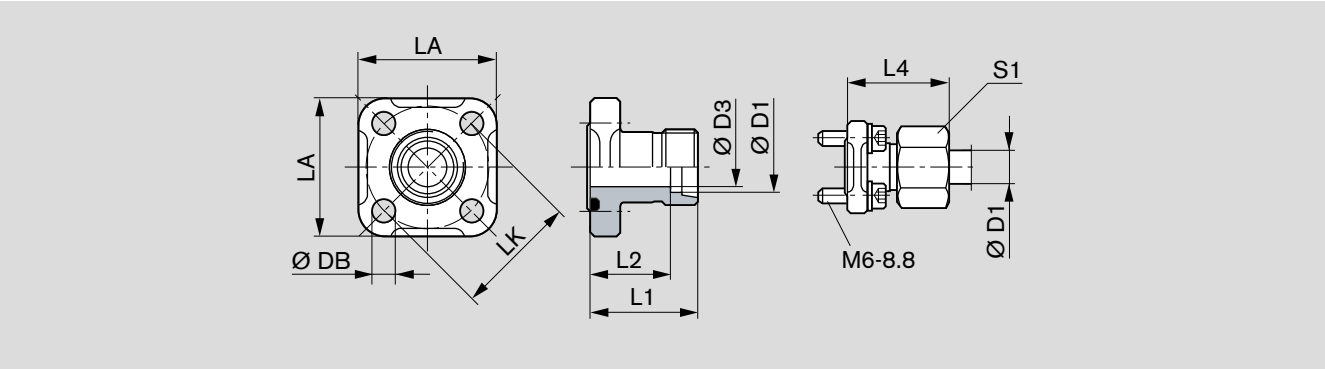

LK	D1	D3	L1	L2	L4	LA	S1	DB	Screws 4x	Seal ring NBR *)	Mass [kg]	Part number	*p* [bar]
35	10L	8	30	23.0	39.0	40	19	6.4	M6x22	20x2.5	0.09	**1 515 702 064**	315
35	12L	10	30	23.0	39.0	40	22	6.4	M6x22	20x2.5	0.10	**1 515 702 065**	315
35	15L	12	30	23.0	38.0	40	27	6.4	M6x22	20x2.5	0.10	**1 515 702 066**	250
40	15L	12	35	28.0	43.0	42	27	6.4	M6x22	24x2.5	0.12	**1 515 702 067**	100
40	18L	15	35	27.5	44.0	42	32	6.4	M6x22	24x2.5	0.13	**1 515 702 068**	100
40	22L	19	35	27.5	44.5	42	36	6.4	M6x22	24x2.5	0.12	**1 515 702 069**	100
40	28L	24	42	27.5	34.5	42	41	6.4	M6x22	24x2.5	0.15	**1 515 702 008**	100

Complete fittings with seal ring, metric screw set, nuts and olive. *) NBR = Perbunan®

Gear pump flange, 90° angle, for rectangular flange 20 see page 9

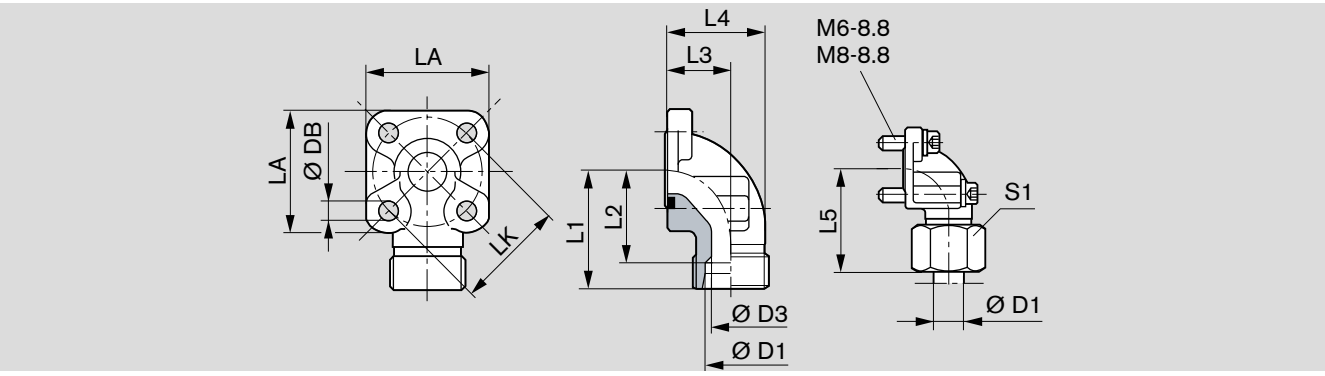

LK	D1	D3	L1	L2	L3	L4	L5	LA	S1	DB	Screws 2x	Screws 2x	Seal ring NBR *)	Mass [kg]	Part number	*p* (bar)
35	10L	8	38	31.0	16.5	26.5	47.0	40	19	6.4	M6x22	M6x35	20x2.5	0.16	**1 515 702 070**	315
35	12L	10	38	31.0	16.5	26.5	47.0	40	22	6.4	M6x22	M6x35	20x2.5	0.16	**1 515 702 071**	315
35	15L	12	38	31.0	16.5	26.5	46.0	40	27	6.4	M6x22	M6x35	20x2.5	0.15	**1 515 702 072**	250
35	16S	12	38	29.5	20.0	31.0	48.0	40	30	6.4	M6x22	M6x40	20x2.5	0.18	**1 515 702 002**	315
35	18L	15	38	29.5	20.0	31.0	47.0	40	32	6.4	M6x22	M6x40	20x2.5	0.18	**1 545 702 006**	250
35	20S	16	45	34.5	25.0	38.0	56.0	40	36	6.4	M6x22	M6x45	20x2.5	0.24	**1 515 702 017**	315
40	15L	12	38	31.0	22.5	36.5	46.0	42	27	6.4	M6x22	M6x22	24x2.5	0.15	**1 515 702 073**	100
40	18L	15	38	30.5	22.5	36.5	47.0	42	32	6.4	M6x22	M6x22	24x2.5	0.17	**1 515 702 074**	100
40	20S	16	40	29.5	22.5	35.5	50.0	42	36	6.4	M6x22	M6x45	24x2.5	0.20	**1 515 702 011**	250
40	22L	19	38	30.5	22.5	36.5	47.5	42	36	6.4	M6x22	M6x22	24x2.5	0.17	**1 515 702 075**	100
40	28L	22	40	32.5	28.0	43.0	49.0	42	41	6.4	M6x20	M6x50	24x2.5	0.24	**1 515 702 010**	100
40	35L	31	41	30.5	34.0	55.0	52.0	42	50	6.4	M6x22	M6x60	24x2.5	0.33	**1 515 702 018**	100

Complete fittings with seal ring, metric screw set, nuts and olive. *) NBR = Perbunan®

Gear pump flange, 3-hole, 90° angle, for rectangular flange 30 see page 9

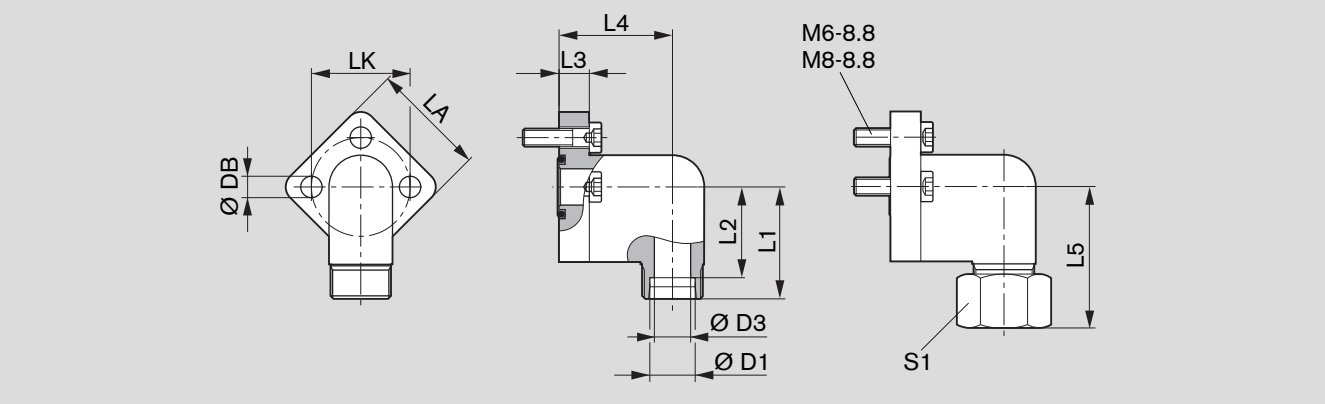

LK	D1	D3	L1	L2	L3	L4	L5	LA	S1	DB	Screws 3x	Seal ring NBR *)	Mass [kg]	Part number	*p* [bar]
30	12L	10	37	30.0	10	37.5	46	38	22	6.4	M 6x22	16x2.5	0.13	**1 515 702 146**	250
30	15L	12	37	30.0	10	37.5	47	38	27	6.4	M 6x22	16x2.5	0.14	**1 515 702 147**	250
30	18L	15	37	30.0	10	37.5	47	38	32	6.4	M 6x22	16x2.5	0.17	**1 515 702 148**	160
40	22L	19	43	35.5	14	41.0	53	48	36	8.4	M 8x30	24x2.5	0.29	**1 515 702 149**	160
40	28L	24	43	35.5	14	41.0	53	48	41	8.4	M 8x30	24x2.5	0.40	**1 515 702 150**	160

Complete fittings with seal ring, metric screw set, nuts and olive. *) NBR = Perbunan®

Note
You can find the permissible tightening torques in our publication:
“General Operating Instructions for External Gear Units”
RE 07 012-B1.

Ordering-No.

Ordering-No.	Page
0 510 215 006	27
0 510 215 007	30
0 510 215 009	26
0 510 215 306	27
0 510 215 307	30
0 510 215 309	26
0 510 225 006	20
0 510 225 007	21
0 510 225 010	33
0 510 225 011	32
0 510 225 012	31
0 510 225 013	34
0 510 225 014	35
0 510 225 022	22
0 510 225 023	25
0 510 225 306	20
0 510 225 307	21
0 510 225 314	34
0 510 225 317	22
0 510 225 318	25
0 510 245 001	36
0 510 245 300	36
0 510 255 300	50
0 510 315 004	27
0 510 315 005	30
0 510 315 006	26
0 510 315 007	28
0 510 315 304	27
0 510 315 305	30
0 510 315 307	26
0 510 325 006	20
0 510 325 007	21
0 510 325 010	33
0 510 325 011	32
0 510 325 012	31
0 510 325 013	34
0 510 325 016	35
0 510 325 018	24
0 510 325 025	22
0 510 325 026	25
0 510 325 306	20
0 510 325 307	21
0 510 325 312	31
0 510 325 313	34
0 510 325 320	22
0 510 325 321	25
0 510 345 001	36
0 510 345 300	36
0 510 355 301	50
0 510 365 009	52
0 510 365 010	48

Ordering-No.	Page
0 510 365 305	39
0 510 365 314	48
0 510 415 005	27
0 510 415 006	30
0 510 415 313	27
0 510 415 314	30
0 510 415 316	26
0 510 425 009	20
0 510 425 010	21
0 510 425 015	33
0 510 425 016	32
0 510 425 019	31
0 510 425 020	34
0 510 425 021	23
0 510 425 025	35
0 510 425 027	24
0 510 425 043	22
0 510 425 044	25
0 510 425 307	20
0 510 425 308	21
0 510 425 314	34
0 510 425 315	23
0 510 425 331	31
0 510 425 334	22
0 510 425 335	25
0 510 425 336	21
0 510 445 001	36
0 510 445 300	36
0 510 455 001	50
0 510 455 002	50
0 510 455 004	56
0 510 455 300	50
0 510 455 301	50
0 510 465 008	48
0 510 465 011	39
0 510 465 012	48
0 510 465 019	57
0 510 465 023	39
0 510 465 025	58
0 510 465 027	55
0 510 465 031	54
0 510 465 032	39
0 510 465 320	39
0 510 465 324	39
0 510 465 326	41
0 510 465 344	39
0 510 465 345	41
0 510 465 346	48
0 510 465 355	49
0 510 515 004	27
0 510 515 005	30

Ordering-No.	Page
0 510 515 007	26
0 510 515 011	28
0 510 515 015	27
0 510 515 018	26
0 510 515 019	30
0 510 515 309	26
0 510 515 310	27
0 510 515 311	30
0 510 515 316	26
0 510 515 317	26
0 510 515 337	29
0 510 515 340	30
0 510 525 009	20
0 510 525 010	21
0 510 525 014	33
0 510 525 015	32
0 510 525 018	20
0 510 525 019	34
0 510 525 020	34
0 510 525 024	23
0 510 525 025	31
0 510 525 030	21
0 510 525 031	32
0 510 525 033	35
0 510 525 034	23
0 510 525 039	24
0 510 525 040	24
0 510 525 041	33
0 510 525 074	22
0 510 525 075	22
0 510 525 076	25
0 510 525 311	20
0 510 525 312	21
0 510 525 315	33
0 510 525 319	20
0 510 525 323	23
0 510 525 324	34
0 510 525 325	34
0 510 525 328	21
0 510 525 331	23
0 510 525 374	22
0 510 525 375	22
0 510 525 376	25
0 510 545 001	36
0 510 545 002	37
0 510 545 003	37
0 510 545 300	36
0 510 545 302	37
0 510 555 001	50
0 510 555 002	50
0 510 555 003	50

Ordering-No.	Page
0 510 555 007	56
0 510 555 300	50
0 510 555 301	50
0 510 555 302	50
0 510 565 012	43
0 510 565 014	39
0 510 565 015	48
0 510 565 016	48
0 510 565 018	41
0 510 565 019	41
0 510 565 022	47
0 510 565 023	47
0 510 565 032	41
0 510 565 033	43
0 510 565 034	41
0 510 565 035	41
0 510 565 037	43
0 510 565 043	52
0 510 565 061	39
0 510 565 065	54
0 510 565 069	41
0 510 565 072	39
0 510 565 078	48
0 510 565 080	54
0 510 565 081	55
0 510 565 095	39
0 510 565 319	39
0 510 565 328	41
0 510 565 329	48
0 510 565 332	41
0 510 565 334	41
0 510 565 335	39
0 510 565 346	47
0 510 565 353	43
0 510 565 356	41
0 510 565 364	43
0 510 565 367	41
0 510 565 371	53
0 510 565 376	39
0 510 565 379	48
0 510 565 385	49
0 510 565 387	39
0 510 565 389	39
0 510 565 393	39
0 510 565 406	39
0 510 565 408	53
0 510 565 417	39
0 510 565 422	53
0 510 565 435	45
0 510 565 436	45
0 510 615 005	26

Ordering-No.	Page
0 510 615 006	27
0 510 615 007	30
0 510 615 008	30
0 510 615 009	28
0 510 615 010	26
0 510 615 314	27
0 510 615 315	30
0 510 615 318	26
0 510 615 321	30
0 510 615 341	27
0 510 625 013	20
0 510 625 014	21
0 510 625 015	21
0 510 625 020	33
0 510 625 021	32
0 510 625 022	20
0 510 625 027	31
0 510 625 028	34
0 510 625 029	34
0 510 625 032	31
0 510 625 039	23
0 510 625 041	32
0 510 625 042	35
0 510 625 043	35
0 510 625 047	24
0 510 625 048	33
0 510 625 049	23
0 510 625 052	24
0 510 625 075	22
0 510 625 076	22
0 510 625 077	25
0 510 625 314	20
0 510 625 315	20
0 510 625 316	21
0 510 625 317	21
0 510 625 327	23
0 510 625 329	34
0 510 625 330	34
0 510 625 332	23
0 510 625 346	33
0 510 625 358	31
0 510 625 368	31
0 510 625 381	22
0 510 625 382	25
0 510 625 386	22
0 510 645 002	36
0 510 645 003	37
0 510 645 004	36
0 510 645 005	37
0 510 645 300	36
0 510 655 001	50
0 510 655 002	50
0 510 655 003	50

Ordering-No.	Page
0 510 655 004	50
0 510 655 005	50
0 510 655 007	51
0 510 655 011	51
0 510 655 300	50
0 510 655 301	50
0 510 655 302	50
0 510 655 303	50
0 510 655 304	50
0 510 665 024	43
0 510 665 025	43
0 510 665 029	41
0 510 665 030	48
0 510 665 036	41
0 510 665 042	47
0 510 665 047	47
0 510 665 052	39
0 510 665 053	43
0 510 665 058	41
0 510 665 061	53
0 510 665 062	49
0 510 665 064	41
0 510 665 067	43
0 510 665 068	52
0 510 665 071	49
0 510 665 076	49
0 510 665 092	53
0 510 665 097	41
0 510 665 111	53
0 510 665 112	53
0 510 665 115	41
0 510 665 126	47
0 510 665 132	47
0 510 665 134	55
0 510 665 135	39
0 510 665 144	39
0 510 665 152	39
0 510 665 325	43
0 510 665 326	43
0 510 665 327	43
0 510 665 328	39
0 510 665 330	39
0 510 665 333	41
0 510 665 334	41
0 510 665 336	39
0 510 665 337	39
0 510 665 339	48
0 510 665 347	41
0 510 665 348	39
0 510 665 354	47
0 510 665 368	39
0 510 665 369	39
0 510 665 371	53

Ordering-No.	Page
0 510 665 372	53
0 510 665 375	41
0 510 665 376	49
0 510 665 379	53
0 510 665 380	57
0 510 665 381	39
0 510 665 382	39
0 510 665 400	43
0 510 665 404	49
0 510 665 416	53
0 510 665 418	39
0 510 665 419	55
0 510 665 420	41
0 510 665 435	47
0 510 665 442	39
0 510 665 449	52
0 510 715 004	30
0 510 715 008	29
0 510 715 306	26
0 510 715 307	30
0 510 715 320	29
0 510 725 030	20
0 510 725 044	31
0 510 725 059	32
0 510 725 060	35
0 510 725 062	21
0 510 725 063	33
0 510 725 076	23
0 510 725 077	34
0 510 725 084	24
0 510 725 112	22
0 510 725 113	22
0 510 725 114	22
0 510 725 120	25
0 510 725 330	20
0 510 725 348	23
0 510 725 349	21
0 510 725 361	34
0 510 725 396	35
0 510 725 410	22
0 510 725 411	22
0 510 725 412	22
0 510 725 418	25
0 510 765 012	43
0 510 765 016	47
0 510 765 022	41
0 510 765 023	43
0 510 765 028	39
0 510 765 045	39
0 510 765 049	39
0 510 765 309	39
0 510 765 312	48
0 510 765 317	41

Ordering-No.	Page
0 510 765 320	43
0 510 765 331	41
0 510 765 334	55
0 510 765 338	41
0 510 765 340	43
0 510 765 341	41
0 510 765 343	39
0 510 765 345	39
0 510 900 001	43
0 510 900 002	43
0 510 900 003	43
0 510 900 004	43
0 510 900 005	43
0 510 900 006	43
0 510 900 007	43
0 510 900 008	43
0 510 900 009	43
0 510 900 010	43
0 510 900 011	43
0 510 900 012	43
0 510 900 013	43
0 510 900 014	43
0 510 900 015	43
0 510 900 016	43
0 510 900 017	43
0 510 900 018	43
0 510 900 019	43
0 510 900 020	43
0 510 900 021	43
0 510 900 022	43
0 510 900 023	43
0 510 900 024	43
0 510 900 025	43
0 510 900 026	43
0 510 900 027	43
0 510 900 028	43
0 510 900 029	43
0 510 900 030	43
0 510 900 031	43
0 510 900 032	43
0 510 900 033	43
0 510 900 034	43
0 510 900 035	43
0 510 900 036	43
0 510 900 037	43
0 510 900 038	43
0 510 900 039	43
0 510 900 040	43
0 510 900 041	43
0 510 900 042	43
0 510 900 043	43
0 510 900 044	43
0 510 900 045	43

Ordering-No.	Page
0 510 900 046	43
0 510 900 047	43
0 510 900 048	43
0 510 900 049	43
0 510 900 050	43
0 510 900 051	43
0 510 900 052	43
0 510 900 053	43
0 510 900 054	43
0 510 900 055	43
0 510 900 056	43
0 510 900 057	43
0 510 900 058	43
0 510 900 059	43
0 510 900 060	43
0 510 900 061	43
0 510 901 000	47
0 510 901 001	47
0 510 901 002	47
0 510 901 003	47
0 510 901 004	47
0 510 901 005	47
0 510 901 006	47
0 510 901 007	47
0 510 901 008	47
0 510 901 009	47
0 510 901 010	47
0 510 901 011	47
0 510 901 012	47
0 510 901 013	47
0 510 901 014	47
0 510 901 015	47
0 510 901 016	47
0 510 901 017	47
0 510 901 018	47
0 510 901 019	47
0 510 901 020	47
0 510 901 021	47
0 510 901 022	47
0 510 901 023	47
0 510 901 024	47
0 510 901 025	47
0 510 901 026	47
0 510 901 027	47
0 510 901 028	47
0 510 901 029	47
0 510 901 030	47
0 510 901 031	47
0 510 901 032	47
0 510 901 033	47
0 510 901 034	47
0 510 901 035	47
0 510 901 036	47
0 510 901 037	47

Ordering-No.	Page
0 510 901 038	47
0 510 901 039	47
0 510 901 040	47
0 510 901 041	47
0 510 901 042	47
0 510 901 043	47
0 510 901 044	47
0 510 901 045	47
0 510 901 500	45
0 510 901 501	45
0 510 901 502	45
0 510 901 503	45
0 510 901 504	45
0 510 901 505	45
0 510 901 506	45
0 510 901 507	45
0 510 901 508	45
0 510 901 509	45
0 510 901 510	45
0 510 901 511	45
0 510 901 512	45
0 510 901 513	45
0 510 901 514	45
0 510 901 515	45

The AZ configurator at www.boschrexroth.com/azconfigurator

The AZ configurator assists you to configure your individual external gear unit easily and user-friendly. You only need to specify your requirements: From the displacement, direction of rotation, drive shaft, connection flange right up to the required rear cover. You immediately receive a project drawing (PDF format) if a configuration already exists. You receive the price of the configured external gear unit upon request.

The AZ configurator assists you to configure your individual external gear unit easily and user-friendly – all data needed for project planning are acquired thru menu guidance.

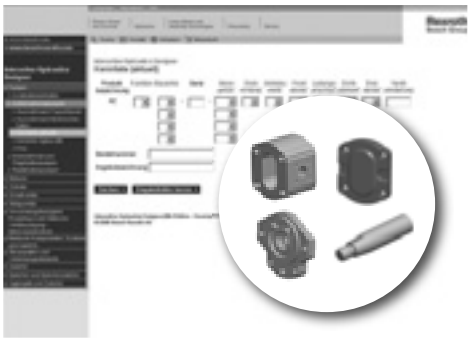

Selection is made either on an ordering code or your technical requirements. This means that you can search for external gear units that have already been configured, or you specify the configuration variant of the external gear unit based upon the operating parameters you require.

If the external gear unit you selected has been released you will receive the part number, ordering code and a detailed installation drawing. If your special configuration is not available please send your specification to Rexroth. One of our employees will then contact you.

Bosch Rexroth AG
Hydraulics
Produktbereich: Mobile Steuerungen
Robert-Bosch-Straße 2
D-71701 Schwieberdingen
Fax +49 (0) 711-811 5 11 18 14
info.brh-stf@boschrexroth.de
www.boschrexroth.com/brm

© This document, as well as the data, specifications and other information set forth in it, are the exclusive property of Bosch Rexroth AG. It may not be reproduced or given to third parties without its consent.
The data specified above only serve to describe the product. No statements concerning a certain condition or suitability for a certain application can be derived from our information. The information given does not release the user from the obligation of own judgment and verification. It must be remembered that our products are subject to a natural process of wear and aging.